KINCROME
PROFESSIONAL QUALITY TOOLS
WORKSHOP



HYDRAULIC ENGINE CRANE

Distributed by Kincrome Group www.kincromegroup.com

Owner’s Assembly and Operating Manual

SPECIFICATIONS 2
IMPORTANT SAFETY INFORMATION 3
UNPACKING AND ASSEMBLING JACK 3
Unpacking Carton 3
Step 1, ... 3
Step 2, ... 3
Step 3; 4
Step 4, ... 4
Step 5 4
Step 6 4
Step 7 4
Step 8 4
Testing Handle Operation 5
OPERATING CRANE 5
Preparing Work Area 5
Using the Engine Crane 6
Working on Engine 6
MAINTENANCE AND STORAGE 7
Lubricating 7
Maintaining Oil Level 7
Important Note: 7
Adding Oil: 7
Replacing Oil: 7
Cleaning 7
Storage 7
Repairing Jack 7

SPECIFICATIONS

Working Load limit	1450 KG
Height lowered	350 mm
Height raised	2350 mm
Handle Length	600 mm
Total Weight:	76 KG
Part Number	K12040

IMPORTANT SAFETY INFORMATION

The use of an engine crane has inherent dangers to avoid risk of personal injury or property damage make sure you are fully aware of the operating instructions for this product and any recommendations in the vehicle owners manual prior to using this tool. Do not exceed maximum lifting capacity of this engine crane. This engine crane is intended for automotive use only. Be aware that large or heavy engines may exceed the stated capacity check vehicle owners manual or contact the engine manufacturer. Do not use for any other purpose accept the raising and lowering of engines. Never use to raise a vehicle, structure or dynamic load, do not lift any human load and never ride on the engine crane.

Each position on the boom has a different rated capacity, the longer the boom the lower the rated capacity. **Warning** dynamic (load which swings, slips from center or lowers quickly) loads can exert a force much greater than their physical mass (weight) resulting in failure of the crane and/or loss of the load leading to property damage, personnel injury, even death.

UNPACKING AND ASSEMBLING JACK

Unpacking Carton

Place carton in a clear, open area such as garage floor. Remove components and lay them out neatly on selected work surface. Make sure all nuts, bolts, washers, and pins, are properly identified and placed safely until needed

Step 1, Lay base #1 out on a firm surface. Make sure there is sufficient room to assemble the crane and to move it once assembled. Assemble legs #8 to base using the four pins #3 the base may need to be elevated to allow for the pins to be properly installed. Once all four pins are in place secure with split pins #5

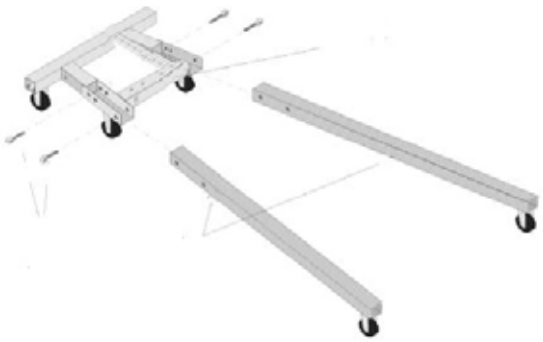

Step 2, Using bolts two bolts #12 washers #? and nuts #2 securely fasten post #10 to base.



Step 3; attach the supports #11 to both sides of the crane using bolt #? Washer #? and Nut #?



Step 4, Position boom #13 into the top of the post, using bolt #14 washer #? and nut #? fasten in place

Step 5 place the jack onto the post mount using bolt # washer # and nut #

Step 6 attach jack to the boom using bolt # washer # and Nut #



Step 7 Insert boom extension into boom and secure in place use bolt # washer # and nut #. **Caution**: The longer the boom the lower the lifting capacity.

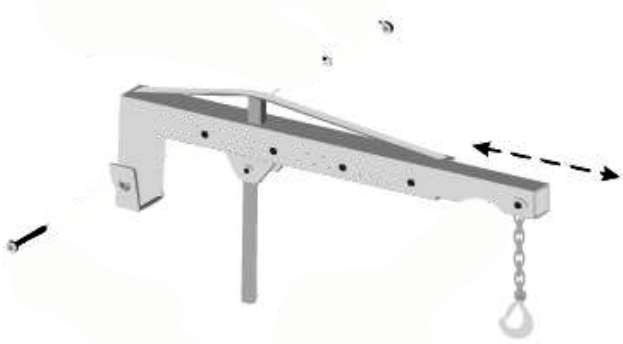

Step 8 recheck all bolts and nuts are tight, split pins are installed on the leg pins and the crane is stable on a flat level surface capable of bearing the weight intended to be lifted. The boom extension is at the desired length with the understanding that the cranes working load limit reduces as the boom length increases.

Testing Handle Operation

Briefly test crane operation as follows BEFORE using to lift any load. With handle on the release valve turning clockwise or counter clock wise allows crane to be raised and lowered. To raise jack, twist handle completely clockwise until it stops. Do not force or tighten beyond this point. Take handle from release valve and place in handle sleeve, Pump handle a few times to raise crane about halfway. If jack does not begin to rise after a few pumps, check to make sure the release valve is tight. With crane raised, place handle on release valve twist handle slowly counterclockwise to lower crane. A normal hissing sound may be heard as crane lowers and pressure in hydraulic cylinder is released.

OPERATING CRANE

Preparing Work Area

Before using the engine crane, it is important to prepare work area properly. Follow this procedure each time the engine crane is used to help prevent property damage and or serious injury.

1.) Thoroughly inspect crane for damage or wear before each use. Briefly test operation of unloaded crane before using to lift any load. If crane is damaged or is malfunctioning DO NOT LIFT ANY LOAD until the problem is corrected.
2.) Consult vehicle owner's manual for safety precautions, engine weight, and location of support areas on engine. The working load limit of this engine crane is between 250 kg and 1450 kg depending on the position of the boom extension. NEVER EXCEED WORKING LOAD LIMIT OF engine crane
3.) Loads which are allowed to swing or move of center can exert a force greater then the weight of the object lifted. Make sure load is secured and not able to move from the vertical lifting line.
4.) Clear children and others from work area before commencing work. Another adult should be nearby for extra safety and assistance but must be clear of vehicle as it is worked on.
5.) Clear obstructions from work area. Working in tight or cluttered work areas is dangerous.
6.) Be sure engine crane and vehicle are on solid, level ground such as paved or concrete driveway or garage floor so the crane is able to be carefully moved to allow engine removal. Uneven or sloped surfaces create hazardous working conditions and dangerously impeded the function of the crane.
7.) With vehicle in proper position, set vehicle's parking brake or emergency brake and put gearshift in park (manual transmissions should be placed in lowest gear). TURN VEHICLE IGNITION OFF AND TO THE "LOCK" POSITION making sure steering wheel locks.
8.) Chock all wheels of vehicle to prevent vehicle rolling. Using wedge-shaped blocks that tyre cannot roll over, position one chock tight against the tyre in both forward and reverse rolling paths.

Using the Engine Crane

- Lifting an engine using an engine crane can be dangerous. This engine crane is designed and intended for use by properly trained and experienced personnel only. If you are not familiar with the proper and safe operation of an engine crane, do not use until proper training and knowledge have been obtained.

Follow all instructions and precautions below.

1.) With lifting arm lowered so as to just clear the engine bay, roll crane into position. Make sure the ground is clean and no obstacles are in the path of the crane.
2.) Attach crane hook to the sling, chain, or load leveling device (not included) making sure the device is securely attached to the engine and is suitably rated to hold the weight
3.) Twist jack handle completely clockwise to close release valve. Place handle in handle sleeve and slowly pump handle until engine crane just begins to support the weight of the engine.
4.) Inspect engine securing device making sure it is centered and properly attached to the engine.
5.) Undo engine from vehicle
6.) Raise crane just high enough for engine to clear engine bay. Slowly and smoothly drag engine crane out from vehicle just far enough for engine to again clear engine bay. Slowly lower engine crane.
7.) Never leave an engine suspended by an engine crane – as soon as is practicable engine should be lowered and mounted on an engine stand or other suitable device.
8.) NEVER work on an engine suspended by and engine crane. Never place and part of you body under and engine supported by an engine crane
9.) Return jack handle to release valve and very slowly turn counter clockwise. Slowly and smoothly lower engine crane excessive speed or jerky motion can cause the engine to slip leading to property damage or personal injury.

Working on Engine

Any engine being supported by an engine crane creates a potentially hazardous working environment. Never place any part of your body beneath an engine supported by an engine crane. NEVER work on an engine suspended by and engine crane. Never place and part of you body under and engine supported by an engine crane. Work should only be attempted on the removed engine once it is no longer supported by the crane, either securely attached to an engine stand or other suitable supporting device.

MAINTENANCE AND STORAGE

Lubricating

Moving parts on engine crane should be lubricated occasionally with a light machine oil to maintain efficient operation. Apply oil to joints on lift arm hinges, handle base, rear caster wheels, and front wheels wipe away excess oil with soft cloth.

Maintaining Oil Level

Important Note:

When adding or replacing oil, always use a good grade Hydraulic Jack Oil. Avoid mixing types of oil. DO NOT use Brake Fluid, Alcohol, Glycerin, Detergent, Motor Oil or Dirty Oil, Improper fluid can cause serious internal damage to Jack.

Adding Oil:

With engine crane in the fully lowered position & on level ground, remove Air Vent Valve. Oil level should be approx 12 mm below valve hole. If low, add oil as needed then close air vent valve.

Replacing Oil:

For better performance & longevity, replace oil supply once a year. To drain oil, open Air Vent Valve and loosen the release Valve by turning handle counterclockwise. BE VERY CAREFUL not to permit dirt or foreign matter to get into the system. Close release valve by turning handle clockwise, fill with good grade Hydraulic Jack Oil close Air Vent Valve wipe away any spilt fluid. Test crane before lifting a load.

Cleaning

Engine crane should be wiped clean with soft cloth only. Do not use gasoline, kerosene, or other such solvents or any abrasive cleanser as cleaning agents and solvents will cause deterioration of the hydraulic seals.

Storage

Before storage, twist release valve 1-1/2 turns counterclockwise to release pressure in hydraulic cylinder. Store engine crane level in a clean environment, preferably indoors, in a dry area to protect engine crane from moisture.

Repairing Jack

There are no user serviceable parts except as outlined above. Only trained, licensed and certified repair personnel should attempt any repairs or replacing of parts. Any modifications to this jack, except those performed by the manufacturer, or their designee, will void all warranties both written an implied.

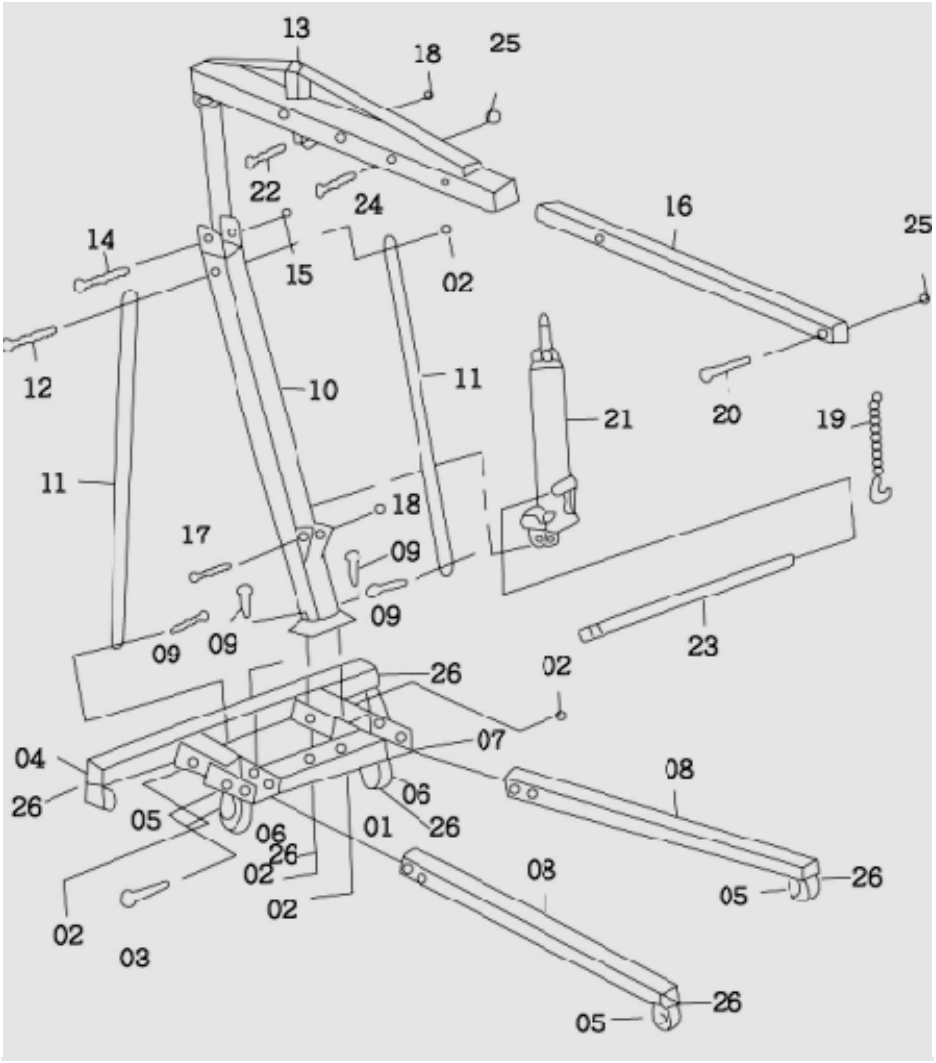

No.	Description	Qty
1	Base	1
2	M14 Hex Nut	5
3	Pins	4
4	M 8x16 Bolts	16
5	Front Wheels	2
6	Rear Wheels	2
7	M 8x16 Bolts	8
8	Legs	2
9	M 14x95 Bolts	4
10	Main Post	1
11	Supports	2
12	M 14x100 Bolts	1
13	Boom	1

No.	Description	Qty
14	M 16x110 Bolts	1
15	M16 Bolts	1
16	Extension Boom	1
17	M 16x90 Bolts	1
18	M16 Bolts	2
19	Hook	1
20	M 14x80 Bolts	1
21	8 Ton Ram	1
22	M 16x85 Bolts	1
23	Handle	1
24	M 14x90 Bolts	1
25	M14 Bolts	2
26	M8 Bolts	24

Distributed by Kincrome Group **www.kincromegroup.com**
3 Lakeview Drive Scoresby Victoria
Phone: 1300 657 528