KINCROME
TOOLS + EQUIPMENT™

Distributed by Kincrome Tools + Equipment 3
Lakeview Drive, Caribbean Business Park,
Scoresby, Vic 3179 Australia
www.kincrome.com.au

KINCROME
CONSTRUCTION

Cement Mixer



PART NO.K14380

CONTENTS

Cement mixer Dimensions page1

Noise Emission Level page2

Safety page3

Safety page4

Assembly Step1/2 ..... page5

Assembly step 3 ..... page6

Assembly Step 4/5 ..... page7

Assembly Step 6 ..... page8

Assembly Step 7 ..... page9

Parts Check List page10

Fixings Check List page11

CEMENT MIXER DIAMENTIONS

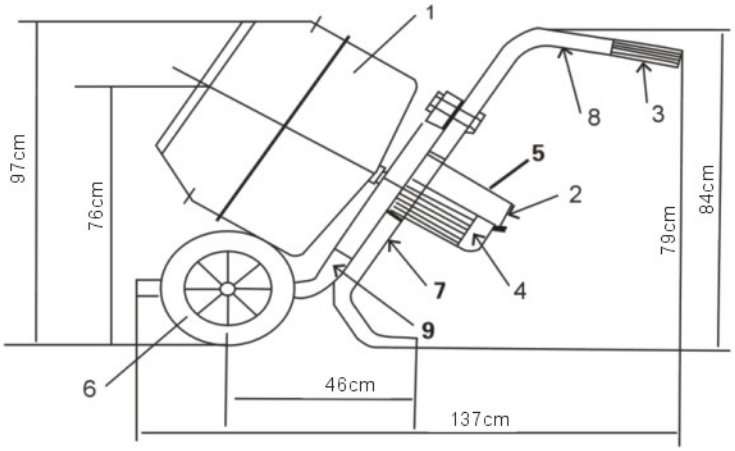

1. MIXING DRUM
2. ON/OFF SWITCH
3. HANDLE GRIPS
4. MOTOR AND GEAR BOX DRIVE
5. MOTOR COVER SHIELD
6. 250mm H/DUTY WHEELS
7. MIXER BASE FRAME
8. DRAW BAR FRAME
9. GEAR BOX MOUNTING FRAME

Drum capacity	0.18m^2
Batch Output	0.10m^2
Drum Diameter	610mm
Discharge outlet height	450mm
Wheels	250mm
Single Phase electric motor	0.5Hp
Storage dimensions	64cmX64cmX65cm
Weight	54 Kgs
Hertz	50 HZ
Voltage	240 V
Motor R.P.M	1680

*Capacities based on usable volume. Product development and improvement is an ongoing process, therefore specifications may change without notice.

NOISE EMISSION LEVEL

The **Mixer** has a noise emission level of 69 decibels.

WIRING DIAGRAM

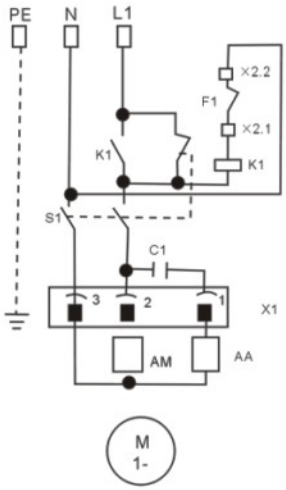

S1 SWITCH
F1 THERMAL PROBE
C1 CONDENSER
X1 MOTOR CONNECTOR
PE EARTH TERMINAL
N NEUTRAL TERMINAL
L1 LIVE TERMINAL
AM MOTOR RUNNING WINDING
K1 RELAY

WARNING

Any type of electrical repair or trouble-shooting should only be performed by an appointed dealer or a properly qualified electrical repair shop.

SAFETY

IMPORTANT!
PLEASE READ THIS SECTION CAREFULLY!

Your **Kincrome** Mixer has been designed with safety in mind. However as with any type of machinery some basic rules apply:



DO NOT Place your hand or hands in or around any part of the drum while it is operating!

DO NOT Place any tools or instruments in or around the drum while it is operating!



DO NOT Operate the mixer on a surface that is not flat or is uneven! Always operate the mixer on a level surface, if placed on an incline the machine will fall over.



DO NOT Clean, assemble or work on the unit while it is plugged in !

DO NOT Allow water to contact the motor or electrical connections at any time!

DO NOT Ignore the safety cut out switch. If your mixer should stop during use it normally indicates a break in power supply, check and rectifies any problem in power supply.

DO NOT Set up or operate the Mixer in or around water puddles.

DO NOT Leave Mixer unattended,whilst in operation!

DO NOT Operate Mixer while under the influence of alcohol or drugs!

DO NOT Start or stop the Mixer when there is material in the Mixer Drum.This will damage the motor. Always make sure the Mixer Drum is Rotating when filling or discharging material.

DO NOT Attempt to move Mixer when there is material in the Mixer Drum.

DO Read all instructions before operating the Mixer.

DO Keep Mixer clean. Wash down immediately after use. Any build up of cement and concrete on your,Mixer will seriously affect the performance and reduce the life of the Mixer.

DO Disconnect the Power supply before moving the Mixer.

DO Keep all moving parts, lightly greased. (Wheels,Axles,swivel Brackets, etc)

DO Periodically check the Mixer for wear or damage.

DO Wear protective safety wear, It is advised not to wear light clothing when using Mixer.

ASSEMBLY OF CEMENT MIXER

STEP1. Place the Mixer Base Frame (Ref 7) onto a Level Surface, Then fix the Base Frame to the Gear Box Mounting Frame (Ref 9) using the 4×3"(75mm) Bolts with 1×Washers and Nuts provided, The washers are shaped to fit around the contour of the Mixer Frame, Make sure all 4 Bolts are tight and secure before proceeding.

STEP2. Fix the Draw bar Frame (Ref 8) to the Gear Box Mounting Frame (Ref 9) using the 4×3"(75mm) Bolts with 2×Washers and Nuts provided. You **will** note there are 2 Washers supplied with each Bolt. These should be positioned either side of the Frame, Again these Washers are shaped to fit around the contour of the Frame, Tighten and secure all 4 Bolts before proceeding.

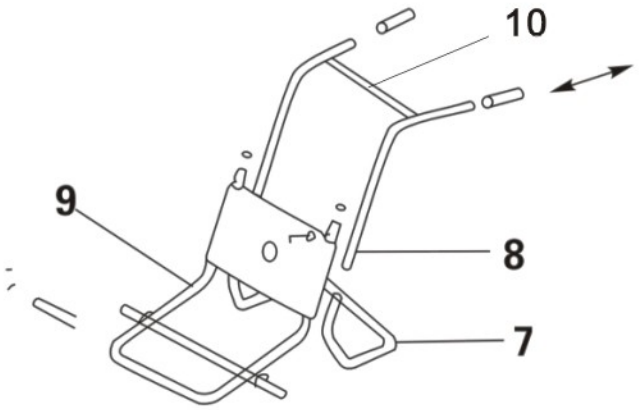

ASSEMBLY OF CEMENT MIXER

Step3. Fit the 2 Rubber Wheels (Ref 6) to the Gear Box Mounting Frame (Ref9) by sliding the Wheels onto the **axle**, Once in place. Secure with the 2 Bolts / W asher Set (Ref 11). Tighten Bolts securely, before proceeding.

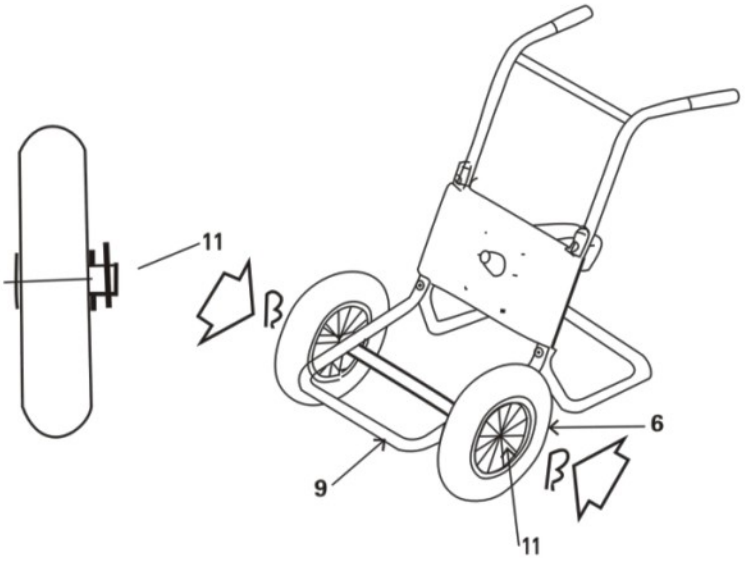

ASSEMBLY OF CEMENT MIXER

STEP4. Turn the assembled Frame of the Mixer on its side. Refer to diagram below. Take the Motor and Gear Box Drive unit, Lining up the 5 exposed Bolts with the 5 Holes,predrilled in the Back plate on the Gear Box Mounting Frame. Secure the Motor Gear Box, using the 5 Locking Nuts provided once secure, turn the Frame into its upward position.

STEP5. Fit the Motor Gear Box Cover shield (Ref 5) to the Gear Box Mounting Frame (Ref 9) using the 2 small Nuts and Bolts provided.

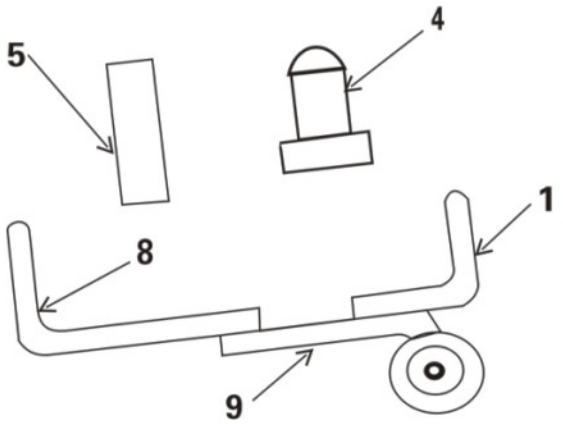

ASSEMBLY OF CEMENT MIXER

STEP6. Mount the Cement Mixer Drum (Ref 1) onto Assembled Frame by locating the Gear Box Shaft, through the Centre Hole in the Mixer Drum.To use locating Point on the Gear Box Shaft to position correctly, Then take the large washer (Ref12) and place on the "T" Handle（REF.13）.Screw the "T" Handle into the Gear Box shaft.Secure tightly before proceeding.

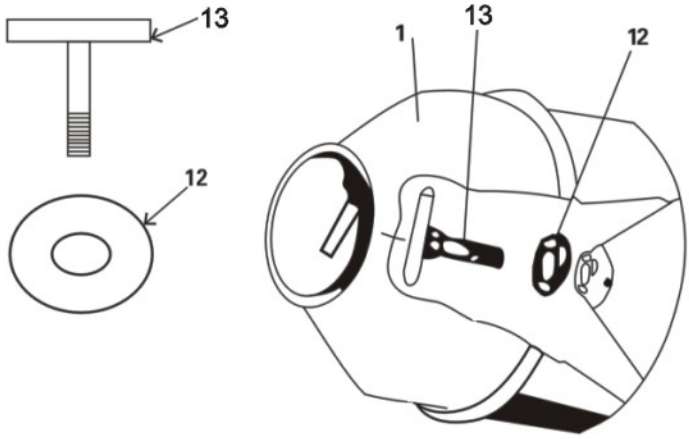

Note Mixing Blades Preassembled in Mixer Drum.

ASSEMBLY OF CEMENT MIXER

STEP7. Fix Tilting Handle (Ref 16) by locating the holes in the Tilting Handle Base Plate with the three Brackets on the under side of the Gear Box Mounting Frame (Refer to Diagram below). Once Holes are aligned secure by using Metal Bolt (Ref 14) lock with Cottar Pin (Ref 15).

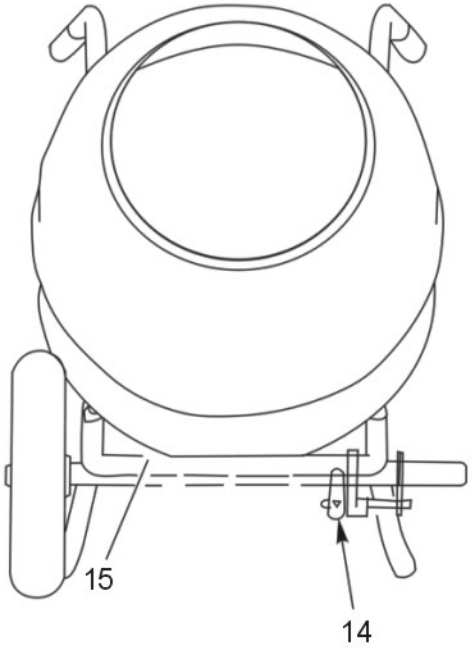

PARTS - CHECK LIST

Ref.	Nos	Description
1	1	Cement Mixer Drum **(Mixing Paddles attached)**
2	1	On /Off Switch (Attached)
3	2	Handle Grips (Attached)
4	1	motor and Gear Box Drive
5	1	Motor Gear Box Cover Shield
6	2	250mm Rubber Wheels
7	1	Base Frame
8	1	Draw Bar Frame
9	1	Gear Box Mounting Frame
10	1	Fixed link
11	2	Cotter pin
12	1	Large Washer
13	1	" T " Bar Handle Bolt
14	1	Tilting Handle Bolt
15	1	Tilting Handle Cottar Bolt
16	1	Tilting Handle Base Plate
17	4	1″ Bolt and Nut with 1 washer
18	4	3″ Bolt and Nut with 2 washer
19	2	4″ Bolt and Nut with 2 washers
20	2	Wheel Bolt Washers
21	4	Small Nut and Bolt
22	5	Nut (Fix Gear Box Drive to stand)

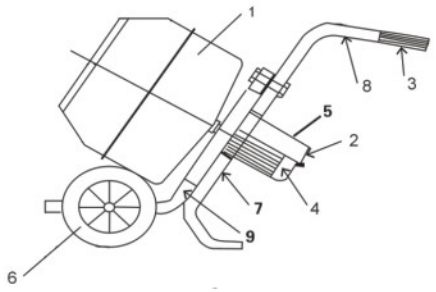

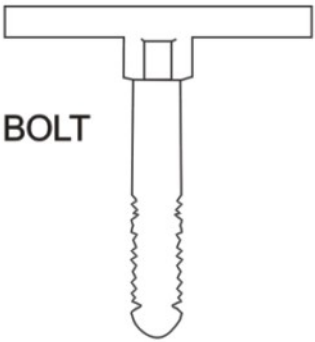

'T' BOLT



2 X COTTER PIN AND WASHER SET

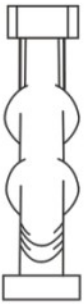

4 X SMALL BOLTS 3 " COMPLETE WITH2 WASHERS & LOCKING NUT

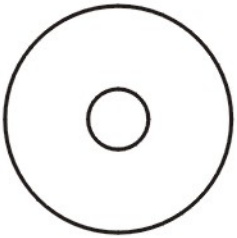

1 X LARGE WASHER

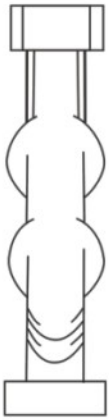

2 X LARGE BOLTS 4 " COMPLETE WITH 2 WASHERS & LOCKING NUT



4 SMALL BOLTS 1 " COMPLETE WITH 1 WASHER & LOCKING NUT