KINCROME

OPERATION MANUAL
PLATE COMPACTOR K14301



WARNING

CE

To reduce the risk of injury, all operators and maintenance personnel must read and understand these instructions before operating, changing accessories, or performing maintenance on this power equipment. All possible situations cannot be covered in these instructions. Care must be exercised by everyone using, Maintaining or working near this equipment.

CONTENTS

Introduction 1
Applications 1
Functions and controls 1
Accessories 1
Hazards and risks 1-2
Operation 2-4
Care and preventive maintenance 4-5
Specification 5-6
Transportation 6
Trouble shooting 6-7
Replacement Parts List 8-13

INTRODUCTION

Thanks for your selection of this equipment. We have taken care in the design, manufacture and testing of the product. Should service or spare parts be required, prompt and efficient service is available from our company or our agent.

General safety instruction for the operation of power equipment

The goal of our company is to produce power equipment that helps the operator work safely and efficiently. The most important safety device for this or any tool is the operator. Care and good judgement are the best protection against injury. All possible hazards cannot be covered here, but we have tried to highlight some of the important items, individuals should look for and obey caution, warning and danger signs placed on equipment, and displayed in the workplace. Operators should read and follow safety instruction packed with each products.

Learn how each machine works. Even if you have previously used similar machines, carefully check out each machine before you use it. Get the "feel" of it and know its capabilities, limitations, potential hazards, how it operates, and how it stops.

APPLICATIONS

Trench compaction	Earthworks
Road maintenance	Landscaping
Brickpaving	Driveway topping

FUNCTIONS AND COPNTROLS

The motor is controlled by an ON/OFF switch or push button is mounted on the motor below the fuel tank.

Tension of the drive belt is adjustable, loosen the four nuts on the bolts which secure the motor to the baseplate. Adjust the set screws which bear against the motor crankcase to achieve the required belt tension. Ensure that the four nuts and the set screw locknuts are tightened after adjustment.

ACCESSORIES

Transport trolley – Fitted with 200mm rubber tyre.
Water tank – for dust reduction cement stabilised soil, bitumen hot mix.

HAZARDS AND RISKS

NEVER allow any person to operate the machine without adequate instruction.

ENSURE all operators read, understand and follow the operating instructions.

SERIOUS INJURY could result from improper or careless use of this machine.

Plate compactors are heavy units and should be positioned by two people of appropriate strength. Using the lifting handles provided on the machine, along with correct lifting techniques.

! MECHANICAL HAZARDS

DO NOT operate the machine unless all protective guards are in place.

KEEP handles and feet clear of rotating and moving parts as they will cause injury if contacted.

ENSURE that the motor operation switch is in the OFF position and the spark plug ignition lead is disconnected before removing the guards or making adjustments.

ENSURE both the machine and the operator are stable by setting up on level terrain and the machine will not tip over, slide of fall while in operation or unattended.

DO NOT leave the machine in operation while it is unattended.

ENSURE that the walls of a trench are stable and will not collapse due to the action of the vibration, prior to commencing compaction.

ENSURE that the area to be compacted does not contain any "live" electrical cables, gas, water or communication services which may be damaged by the action of vibration.

EXERCISE CARE when operating unit. Exposure to vibration or repetitive work actions may be harmful to hands and arms.

NEVER stand on the unit while it is operating.

DO NOT increase the governed no-load motor speed above 3,500 r/min. Any increase may result in personal injury and damage to the machine.

BE CAREFUL not to come in contact with the muffler when the engine is hot, since it can cause severe burns.

ENSURE that the repairs to the motor and machine are carried out by COMPETENT personnel.

! FIRE & EXPLOSION HAZARDS

PETROL is extremely flammable and explosive under certain conditions.

PDF 文件使用 "pdfFactory Pro" 试用版本创建 www.fineprint.cn

ENSURE that the petrol is only stored in an approved storage container.

DO NOT refuel the motor while it is in operation or hot.

DO NOT refuel the motor in the vicinity of sparks, a naked flame or a person smoking.

DO NOT over fill the fuel tank and avoid spilling petrol when refueling. Spilled petrol or petrol vapour may ignite. If spillage occurs, ensure that the area is dry before starting the motor.

ENSURE that the fuel tank cap is securely fitted after refueling.

! CHEMICAL HAZARDS

DO NOT operate or refuel a petrol or diesel motor in a confined area without adequate ventilation.

CARBON MONOXIDE exhaust gases from internal combustion motor driven units can cause death in confined spaces.

! NOISE HAZARDS

EXCESSIVE NOISE can lead to temporary or permanent loss of hearing.

WEAR an approved hearing protection device to limit noise exposure. As required by Occupational Health and Safety regulations.

PROTECTIVE CLOTHING

ALWAYS wear approved hearing protection when working in a confined work space. Protective goggles and a dust mask should be worn when working in a dusty environment. Protective clothing and footwear may also be desirable when working with hot mix bitumen.

! ADDITIONAL HAZARDS

Slip/Trip/Fall is a major cause of serious injury or death. Beware of uneven or slippery work surfaces.

Exercise care when working in the vicinity of unprotected holes or excavations.

OPERATION

Pre-start-up Inspection

The following Pre-start-up inspection must be performed before the start of each work session or after every four hours of use, whichever is first. If any fault is discovered, the compactor must not be used until the fault is rectified.

1. Thoroughly inspect the compactor for signs of damage. Check components are present and secure. Pay special attention to the belt drive safety guard fitted between the engine and the vibrator unit.
2. Check the engine oil level and top up as necessary.
3. Check the engine fuel level and top up as necessary.
4. Check for fuel and oil leaks.

Start and stop Procedure

PDF 文件使用 "pdfFactory Pro" 试用版本创建 www.fineprint.cn

.**Petrol Engine**

1. Open the fuel tap by moving the fuel ON / OFF lever fully to the right.
2. If starting the engine from cold, set the choke ON by moving the choke lever fully to the left. If restarting a warm engine, the choke is usually not required. However, if the engine has cooled to a degree, partial choke may be required.
3. Turn the engine ON/OFF switch clockwise to the "1" position.
4. Set the throttle to the idle position by moving the throttle lever fully to the right. Do not start the engine on full throttle, as the compactor will vibrate as soon as the engine starts.
5. Taking a firm hold of the control handle with one hand, grasp the recoil starter handle with the other. Pull the recoil starter until engine resistance is felt, then let starter return.
6. Taking care not to pull the starter's cope fully out, pull the starter handle briskly.
7. Repeat until the engine fires.
8. Once the engine fires gradually, set the choke lever to the OFF position by moving it to the right.
9. If the engine fails to fire after several attempts, follow the trouble-shooting guide on page 7 To stop the engine, set the throttle to idle and turn the engine ON /OFF switch anticlockwise to the "0" position.
10. To stop the engine,set the throttle to idle and turn the engine ON/OFF switch anticlockwise to the "0" position.
11. Turn the fuel off.

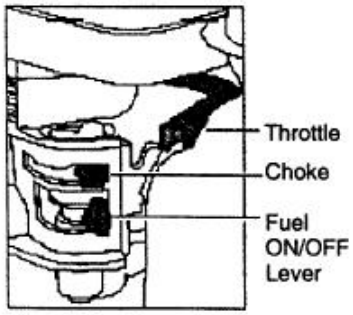

The machine is best suited to the compaction of bituminous and granular materials e.g. granular soils such as silt and clay are best compacted using the impact force produced by a vibrating rammer.

Where possible the site should be graded and levéled before commencing compaction.

Correct moisture content in soil is vital to proper compaction. Water acts as a lubricant to help slide soil particles together. Too little moisture means inadequate compaction; too much moisture leaves water-filled voids that weaken the soil's load-bearing ability.

Compaction of dry materials will be facilitated by moistening with a water hose fitted with a sprinkler.

Excessive watering or water content will cause the machine to stall.

The optional water tank kit is recommended when the machine is used on bituminous surfaces as the water film prevents a build up of material on the underside of the plate.

Use unleaded grade petrol and ensure that the fuel is free from contamination.

The vibratory motion provides a self propelling action. Position the handle at the opposite end of the machine to the vibrator.

Increase the motor speed to the maximum setting using the hand throttle lever, before commencing compacting.

The machine should be controlled by grasping the handle with both hands and applying restraint to control the forward motion.

Steer the machine by moving the handle sideways to the right or left.

ALWAYS maintain good footing so that you do not slip and loose control when starting or operating the machine.

If the optional water tank is fitted, the flow rate can be controlled by adjusting the cock in the supply hose to the sprinkler bar.

CARE AND PREVENTIVE MAINTENANCE

Check the oil level in the motor crankcase daily.

Check the vibrator oil level weekly.

Inspect the rubber anti vibration mounts for wear or deterioration.

If the optional water tank is fitted inspect the water hose and its connections to ensure that they do not leak.

Clean the underside of the plate regularly to prevent a build up of material.

PDF 文件使用 "pdfFactory Pro" 试用版本创建 www.fineprint.cn

CAUTION:

Inspection and other services should always be carried out on hard and level ground with the engine shut down.

Inspection and Maintenance Service Tables.

To make sure your plate compactor is always in good working condition before using, carry out the maintenance inspection in accordance with Tables 1 through 3.

TABLE 1. MACHINE INSPECTION

Item	Hours of Operation
(Starting check)	Every 8 hours (every day)
Loosened of lost screws	Every 8 hours (every day)
Damage of any part	Every 8 hours (every day)
Function of controlling system part	Every 8 hours (every day)
Vibrator oil check	Every 100 hours
Vibrator oil replacement	Every 200 hours
V-belt (clutch) check	Every 200 hours

TABLE 2. ENGINE CHECK

(For details, see separate engine Manual)	
Item	Hours of Operation
Leakage of oil fuel	Every 8 hours (every day)
Tightness of fastening Threads	Every 8 hours (every day)
Engine oil check and replenishment	Every 8 hours (every day) (Replenish to specified Max. level)
Engine oil replenishment	At first 20 hours, then every 100 hours
Air cleaner cleaning	Every 50 hours

CAUTION:

These inspection intervals are for operation under normal conditions. Adjust your inspection intervals based on the number hours plate compactor is in use, and particular working conditions.

CAUTION:

Fuel piping and connections should be repiaced every 2 years.

Daily Service

- **Check for leakage** of fuel or oil.
- Remove soil and clean the bottom of compaction plate.
- Check engine oil.

Check for loose screws including tightness. See Table 3 below (tightening torque), for retightening.

TABLE 3.
TIGHTENING TORQUE (in. kg/cm) Diameter

Material	6mm	8mm	10mm	12mm	14mm	16mm	18mm	20mm
4T	70	150	300	500	750	1100	1400	2000
6-8T	100	250	500	800	1300	2000	2700	3800
11T	150	400	800	1200	2000	2900	4200	5600
*	100(6mm) 300-350(8mm) 650-700(10mm)							
*(In case counter-part is of aluminum								
(Threads in use with this machine are all right handed)								
Material and quality of material is marked on each bolt,and screw.								

Changing Vibrator Oil

When changing the vibrator oil, remove the drain plug

Changing Vibrator Oil

When changing the vibrator oil, remove the drain plug located at the bottom-right of the vibrator, and simply tip the compactor to drain the oil. Note that the oil will drain more easily while it is hot. Replace the oil with 200ML of 10W-30 motor oil.

Air Filter

1. The air filter element should be cleaned because a clogged air cleaner can cause poor engine starting, lack of power and shorten engine life substantially.
2. To clean or replace air filter loosen the wing nut on the air filter housing (Figure 1), remove the cover and take out air filter cartridge. If only cleaning of the air filter is desired blow through the air filter cartridge from the inside, moving a jet of dry compressed air up and down until all dust is removed.

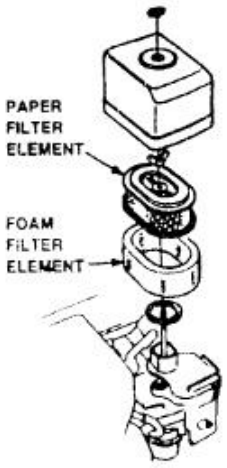

Figure 1 Air Filter

PDF 文件使用 "pdfFactory Pro" 试用版本创建 www.fineprint.cn

CAUTION:

NEVER attempt to check the V-belt with the engine running. Severe injury can occur if your hand gets caught between the V-belt and the clutch. Always use safety gloves.

- **Checking and Replacing the V-belt and Clutch**

After 200 hours of operation, remove the upper belt cover to check the V-belt tension (Figure 2). Tension is proper if the belt bends about 10mm when depressed strongly with finger between shafts. Loose or worn V-belts reduces power transmission efficiency, causing weak compaction and reduces the life of the belt itself.

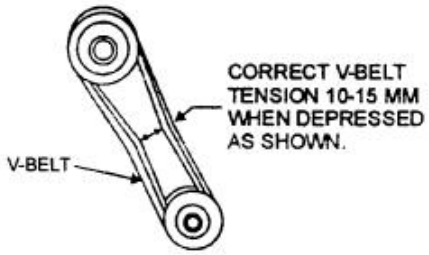

Figure2.V-Belt Tension

CAUTION:

Whenever the compactor's vibration becomes weak or lost during normal operation regardless of operation hours, check the V-belt and clutch immediately.

- **Replacing the V-belt**

Remove the upper and lower belt covers. Engage an offset wrench (13mm) or the like to vibrator pulley (lower) fastening bolt. Engage waste cloth or the like at midway of V-belt on the left side and while pulling it back strongly, rotate the offset wrench clockwise so that the V-belt will come off.

- **Reinstalling the V-belt**

Engage V-belt to lower vibrator pulley and push the V-belt to left side of upper clutch and, in the same manner as in removal, rotate offset wrench clockwise so that the V-belt goes back on.

- **Checking Clutch**

Check the clutch simultaneously with V-belt checking. With belt removed, check outer drum of the clutch for seizure and "V" groove for wear or damage with your eyes. Clean the "V" groove as necessary. Wear of lining or shoe should be checked with running check. If the shoe is worn, power transmission becomes deficient and slipring will result.

SPECIFICATIONS

motor

80TD	Diesel,KAMA170	3.2 kW output
80THC	Chinese Petrol Engine	4.8 kW output
80TR	Petrol, Robin EY20	4.2 kW output
80H	Petrol, Honda GX160	4.0 kW output

Governed speed - 3,500r/min

Drive Belt

1 x 'A' section vee belt

Vibrator

Frequency ---- 5,500 vibration/min

Centrifugal force ----- 13.0 kN

Operation Mass:

80TD	94kgs
80THC	84kgs
80TR	83kgs
80H	83kgs

Acoustic Noise (According to 2000/14/EC)

	80TD	80THC/TR/H
Measured sound power level	103.6dB	102.2dB
Guaranteed sound power level	106.6dB	105.2dB
Uncertainty	3dB	3dB

Hand-Arm-Vibration (as per ISO8662, Part 1, m/s^2): 4-9

Nameplate

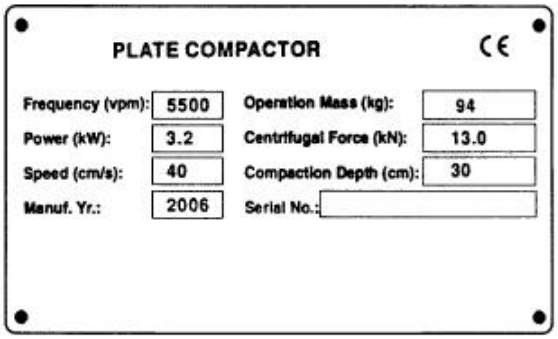

Bearings

The following bearing are sealed:

Centrifugal clutch – grease lubricated

Vibrator – oil bath lubricated

PDF 文件使用 "pdfFactory Pro" 试用版本创建 www.fineprint.cn

Working Size (L x W x H):
69x50x105cm

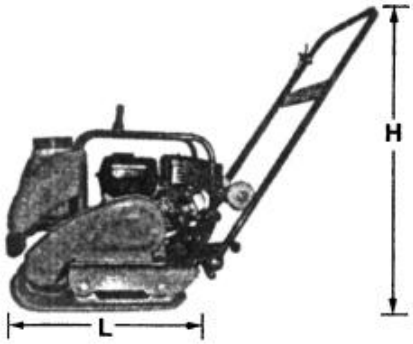



TRANSPORTATION

1. Always shut off engine when transporting machine.
2. Make sure lifting device has enough capacity to hold machine (see identification plate on machine for weight).
3. Use central lifting point (a) when lifting machine.
4. Trolley wheel (b) is used for short distance transportation.

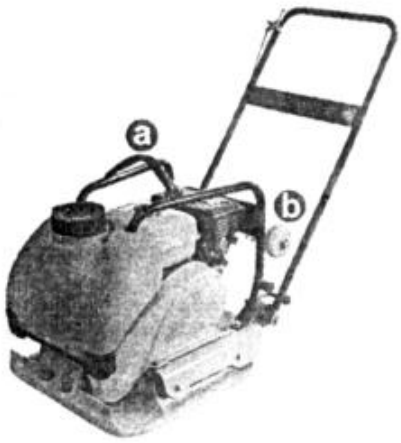

TROUBLE SHOOTING

SYMPTOM	POSSIBLE CAUSES	SOLUTION
Travel speed too low, and vibration is weak.	Engine speed too low?	Set engine speed to correct RPM.
	Clutch slips?	Check or replace clutch.
	V-belt slips?	Adjust or replace V-belt.
	Excessive oil in vibration?	Drain excess oil and fill to proper level.
	Malfunction in vibrator housing?	Check eccentric, gears and counter weights.
	Bearing Failure?	Replace Bearing
	Insufficient engine output?	Check engine, compression etc.

PDF 文件使用 "pdfFactory Pro" 试用版本创建 www.fineprint.cn

ENGINE TROUBLE SHOOTING

SYMPTOM	POSSIBLE CAUSE	SOLUTION
Difficult to start, "fuel is available,but no SPARK at spark plug".	Spark plug bridging?	Check gap, insulation or replace spark plug.
	Carbon deposit on spark plug?	Clean or replace spark plug.
	Short circuit due to deficient spark plug insulation?	Check spark plug insulation, replace if worn.
	Improper spark plug gap?	Set to proper gap.
Difficult to start, "fuel is available,and SPARK is present at spark plug.	ON/OFF switch is shorted?	Check switch wiring, replace switch.
	Ignition coil defective?	Replace ignition coil.
	Improper spark gap, points dirtry?	Set correct spark gap and clean points.
	Condenser insulation worn or short circuiting?	Replace condenser.
	Spark plug wire broken or short circuiting?	Replace defective spark plug wiring
Difficult to start, "fuel is available,spark is present and compression is normal"	Wrong fuel type?	Flush fuel system, and replace with correct type of fuel.
	Water or dust in fuel system?	Flush fuel system.
	Air cleaner dirty?	Clean or replace air cleaner.
Difficult to start, "fuel is available, spark is present and compression is low.	Suction/exhaust valve stuck or protruded?	Re-seat valves.
	Piston ring and/or cylinder worn?	Replace pistion rings and or pistion.
	Cylinder head and/or spark plug not tightened properly?	Torque cylinder head bolts and spark plug.
	Head gasket and/or spark plug gasket damaged?	Replace head and spark plug gaskets.
No fuel present at carburetor.	Fuel not available in fuel tank?	Fill with correct type of fuel.
	Fuel cock does not open properly?	Apply lubricant to loosen fuel cock level, replace if necessary.
	Fuel filter clogged?	Replace fuel filter.
	Fuel tank cap breather hole cloged?	Clean or replace fuel tank cap.
	Air in fuel line?	Bleed fuel line.
"Weak in power" compression is proper and does not mistire.	Air cleaner not clean?	Clean or replace air cleaner.
	Improper level in carburetor?	Check float adjustment, re-build carbureator.
	Defective Spark plug?	Clean or replace spark plug.
"Weak in power" compression is proper but mistires.	Water in fuel system?	Flush fuel system, and replace with correct type of fuel.
	Dirty spark plug?	Clean or replace spark plug.
	Ignitiion coil defective?	Replace ignition coil.
Engine overheats.	Spark plug heat value improper?	Replace with correct type of spark plug.
	Correct type of fuel?	Replace with correct type of fuel.
	Cooling fins dirty?	Clean cooling fins.
Rotational speed fluctuates.	Governor adjusted correctly?	Adjust governor.
	Governor spring defective?	Replace governor spring.
	Fuel flow restricted?	Check entire fuel system for leaks or clogs.
Recoil starter malfunction.	Recoil mechanism clogged with dust and dirt?	Clean recoil assembly with soap and water.
	Sprial spring loose?	Replace sprial spring.

PDF 文件使用 "pdfFactory Pro" 试用版本创建 www.fineprint.cn

K14301 Explosive Diagram

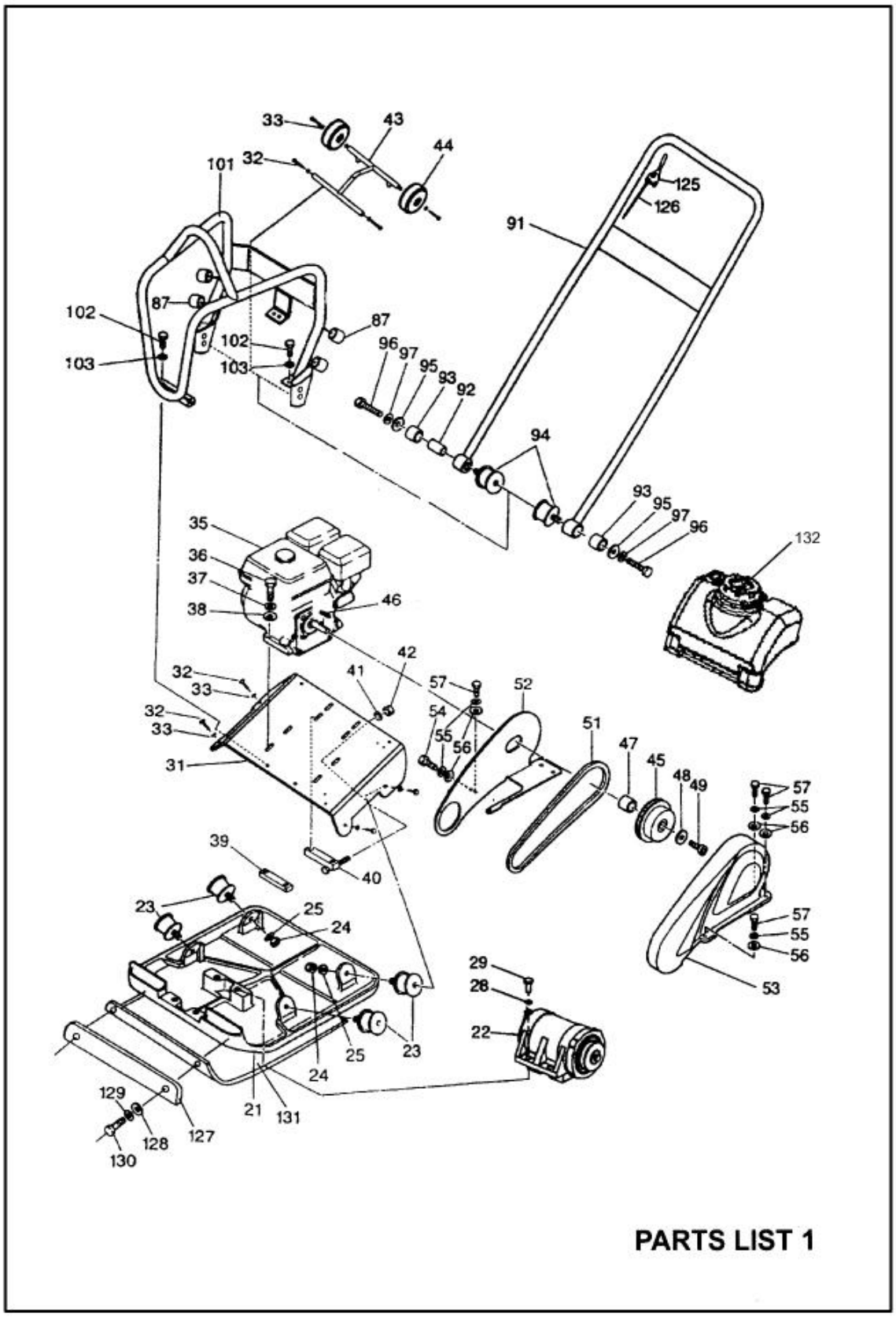

PDF 文件使用 "pdfFactory Pro" 试用版本创建 www.fineprint.cn

PARTS LIST 1

ITEL NO.	PART NO.	DESCRIPTION	QTY
21	14301-21	BASE PLATE	1
22	14301-22	VIBRATOR ASSY.	1
23	14301-23	SHOCK ABSORBER	4
24	14301-24	NUT M10-GB170	4
25	14301-25	SPRING WASHER 10-GB93	4
26	14301-26	WASHER	4
28	14301-28	SPRING WASHER 16-GB93	4
29	14301-29	BOLT M16X40-GB5783-86	4
31	14301-31	ENGINE MOUNTING PLATER	1
32	14301-32	BOLT M10X30-GB5783	4
33	14301-33	SPRING WASHER 10-GB93	4
35	14301-35	ENGINE	1
36	14301-36	BOLT M8-50-GB5783	4
37	14301-37	SPRING WASHER 8-GB93	4
38	14301-38	WASHER 8-GB95	4
39	14301-39	ENGINE NUT (I)	1
40	14301-40	ENGINE NUT (II)	1
41	14301-41	WASHER 6-GB95	1
42	14301-42	LOCK NUT M6-GB889	1
43	14301-43	WHEEL SHAFT (OPTIONAL)	1
44	14301-44	WHEEL (OPTIONAL)	2
45	14301-45	CLUTCH PULLEY ASSY	1
46	14301-46	KEY C5X35	1
47	14301-47	CLUTCH WASHER	1
48	14301-48	SPRING WASHER 8-GB93	1
49	14301-49	BOLT M8X25-GB5783	1

PDF 文件使用 "pdfFactory Pro" 试用版本创建 www.fineprint.cn

PARTS LIST 1

ITEL NO.	PART NO.	DESCRIPTION	QTY
51	14301-51	V-BELT FOR PETROL ENGINE	1
52	14301-52	INSIDE BELT COVER	1
53	14301-53	BELT COVER FOR PETROL ENGINE	1
55	14301-55	BOLT M8X20-GB5783	1
56	14301-56	SPRING WASHER 8-GB93	5
57	14301-57	WASHER 8-GB95	5
58	14301-58	BOLT M8X25-GB5783	4
87	14301-87	RUBBER COLLAR	4
91	14301-91	HANDLE	1
93	14301-93	RUBBER	2
94	14301-94	RUBBER MOUNT	2
95	14301-95	WASHER 12-GB96	2
96	14301-96	BOLT M12X65-GB5780	2
97	14301-97	SPRING WASHER 12-GB93	2
101	14301-102	GUARD HOOK	1
102	14301-102	SPRING WASHER 10-GB93	4
103	14301-103	SPRING WASHER 10-GB93	4
125	14301-125	THROTTLE CONTROL LEVER (OPTIONAL)	1
126	14301-126	THROTTLE CONTROL WIRE (OPTIONAL)	1
127	14301-127	FIX STRIP (OPTIONAL)	1
128	14301-128	WASHER 10-gb97 (OPTIONAL)	2
129	14301-129	SPRING WASHER 10-GB93 (OPTIONAL)	2
130	14301-130	BOLT M10X45-GB5783 (OPTIONAL)	2
131	14301-131	RUBBER MAT (OPTIONAL)	1
132	14301-132	WATER TANK	1

PDF 文件使用 "pdfFactory Pro" 试用版本创建 www.fineprint.cn

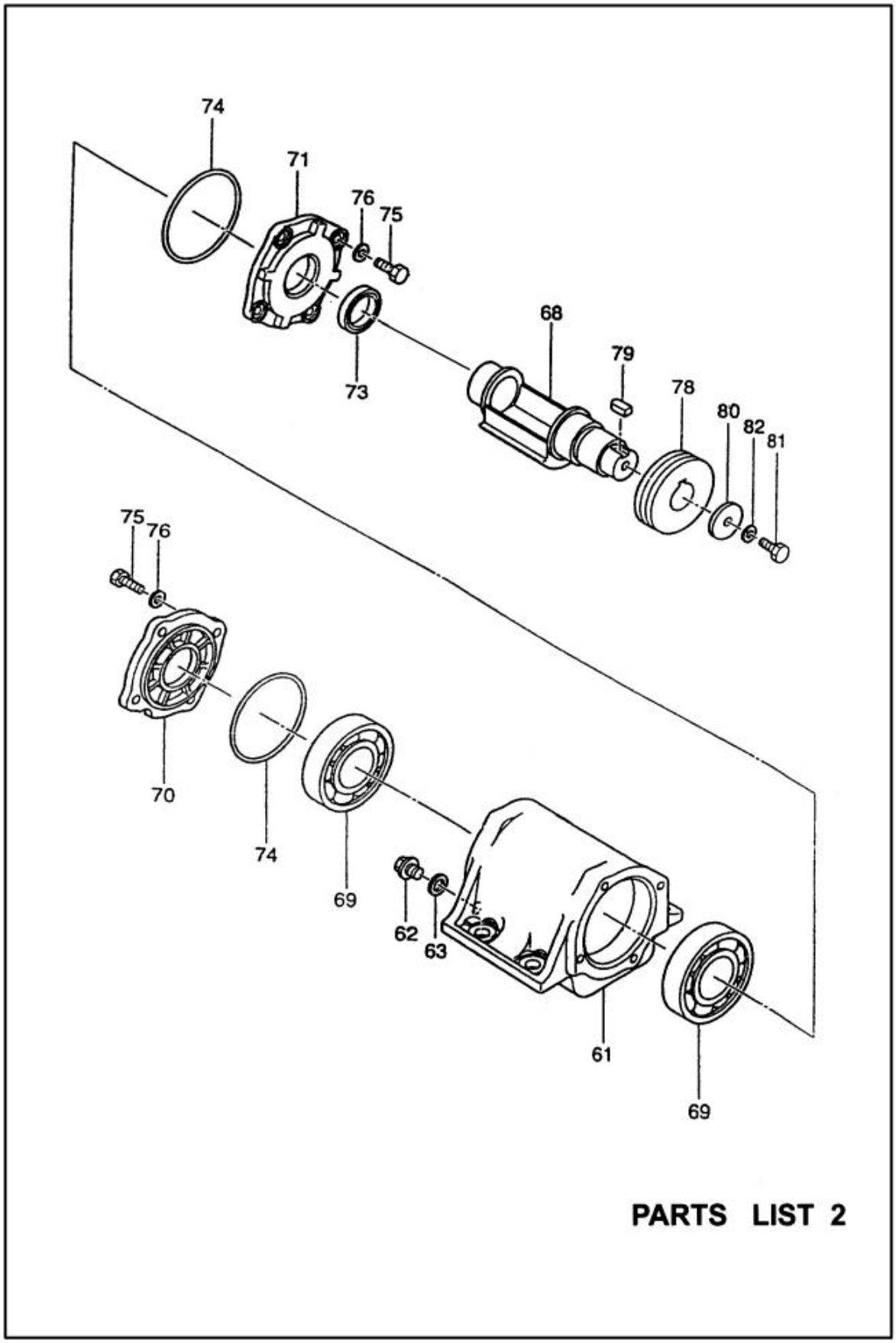

PARTS LIST 2

PDF 文件使用 "pdfFactory Pro" 试用版本创建 www.fineprint.cn

PARTS LIST 2

ITEL NO.	PART NO.	DESCRIPTION	QTY
61	14301-61	VIBRATING CASE	1
62	14301-62	PLUG SCREW	1
63	14301-63	PACKING PIECE	1
68	14301-68	ECCENTRIC ROTATOR	1
69	14301-69	BEARING 6211-GB276	2
70	14301-70	CASE COVER (R)	1
71	14301-71	CASE COVER (L)	1
73	14301-73	OIL SEAL 35X8-GB9877	1
74	14301-74	O-RING 100-GB3452.1	2
75	14301-75	BOLT M8X25-GB5783	8
76	14301-76	SPRING WASHER 8-GB93	8
78	14301-78	PULLEY	1
79	14301-79	KEY C8-GB1096	1
80	14301-80	PULLEY WASHER	1
81	14301-81	BOLT M10X25-GB5783	1
82	14301-82	SPRING WASHER 10-GB93	1

PDF 文件使用 "pdfFactory Pro" 试用版本创建 www.fineprint.cn