KINCROME PT18

18V Battery
2Ah, 4Ah, 5Ah & 6Ah

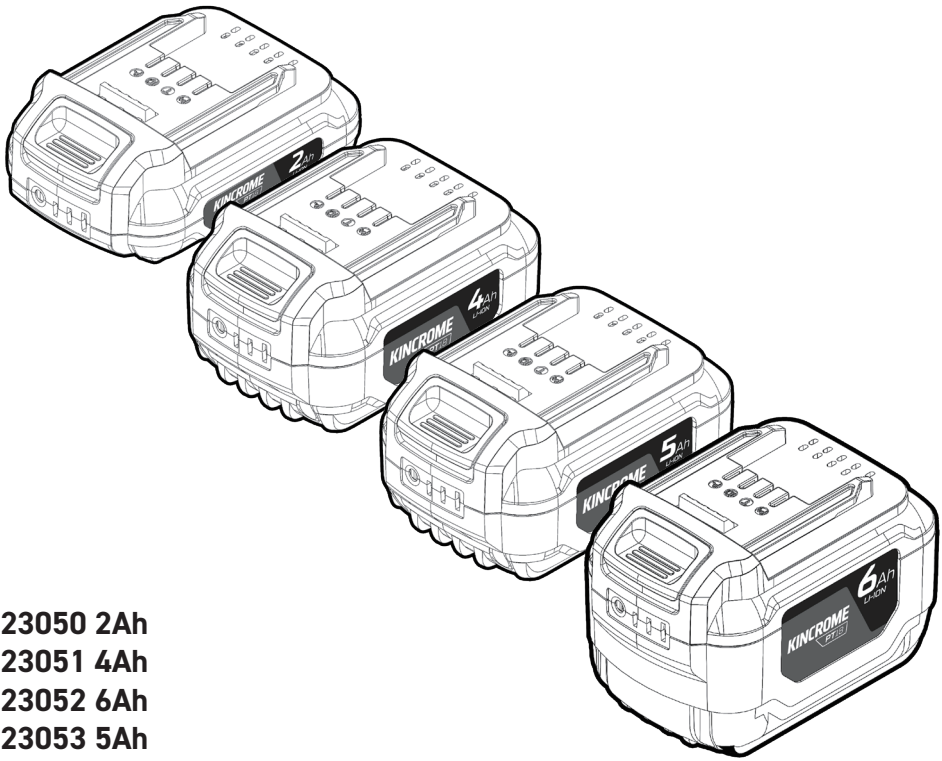

K23050 2Ah
K23051 4Ah
K23052 6Ah
K23053 5Ah

ED1 MARCH 2026

General Safety Warnings

WARNING!: This operating manual contains important safety information, read carefully & understand all information before operating. Save this manual for future use.
WARNING!: Before using the battery pack and Charger, read this operator's manual, your tool Operator's manual, and all labels on the battery Pack, charger and tool.

CAUTION - to reduce the risk of injury, charge lithium-ion Packs only in their lithium-ion charger.
Other types of chargers may cause personal injury or damage. Do Not wire a battery pack to a power supply plug or car cigarette lighter. Battery packs will be prematurely fail.

1. Use lithium-ion packs only on compatible lithium-ion tools.

2. Avoid dangerous environments.
Do not charge battery pack in rain, snow, damp or wet locations. Do not use battery pack or charger in the presence of explosive atmospheres (gaseous fumes, dust or flammable materials) because sparks may be generated when inserting or removing battery pack, possibly causing fire.

3. Charge in a well ventilated area.
Do not block charger vents. Keep them clear to allow proper ventilation. Do not allow smoking or open flames near a charging battery pack. Vented gases may explode.

4. Do not burn or incinerate battery packs.
Battery packs may explode, causing personal injury or damage. Toxic fumes and materials are created when battery packs are burned.

5. Do not crush, drop, or damage battery packs.
Do not use a battery pack or charger that has received a sharp blow, been dropped, run over, or damaged in any way (e.g., pierced with a nail, hit with a hammer, stepped on).

6. Do not disassemble.
Incorrect reassembly may result in the risk of electric shock, fire or exposure to battery chemicals. If it is damaged contact kincrome customer service.

7. Battery chemicals cause serious burns.
Never allow contact with skin, eyes, or mouth. If a damaged battery pack leaks battery chemicals, use rubber or neoprene gloves to dispose of it. If skin is exposed to battery fluids, wash with soap and water and rinse with vinegar. If eyes are exposed to battery chemicals, immediately flush with water for 20 minutes and seek medical attention.
Remove and dispose of contaminated clothing.

8. Do not short circuit. *A battery pack will short circuit if a metal object makes a connection between the positive and negative contacts on the battery pack. Do not place a battery pack near anything that may cause a short circuit, such as coins, keys or nails in your pocket. Do not allow fluids to flow into battery pack. Corrosive or conductive fluids, such as seawater, certain industrial chemicals, and bleach or bleach containing products, etc., can cause a short circuit. A short circuited battery pack may cause fire, personal injury, and product damage.*

9. Store your battery pack and charger in a cool dry place.
Do not store battery pack where temperatures may exceed 40°C (104°F) such as in direct sunlight, a vehicle or metal building during the summer.

Battery charger safety instructions

1. *Before using the charger read all instructions and cautionary markings on the charger, battery pack and the product using the battery pack.*
2. *This charger is not intended for any uses other than charging rechargeable batteries. Any other use may result in risk of fire, electric shock or electrocution.*
3. *Do not place any object on top of the charger or place the charger on a soft surface that may result in excessive internal heat. Place the charger in a position away from any heat source.*
4. *To reduce risk of damage to the electric plug and cord, pull by the plug rather than the cord when disconnecting the charger.*
5. *Make sure the cord is located so that it will not be stepped on, tripped over, or otherwise subjected to damage or stress.*
6. *An extension cord should not be used unless absolutely necessary. Use of an improper extension cord could result in the risk of fire, electric shock or electrocution.*
7. *Do not operate the charger if it has received a sharp blow, been dropped or otherwise damaged in any way. Have it checked by an electrician or power tool repairer.*
8. *Do not disassemble charger. Take it to an electrician or power tool repairer when service or repair is required. Incorrect reassembly may result in a risk of electric shock, electrocution or fire.*
9. *To reduce risk of electric shock, unplug the charger from the outlet before attempting any cleaning. Removing the battery pack will not reduce this risk.*
10. *Never attempt to connect 2 chargers together.*
11. *Do not store or use the tool and battery pack in locations where the temperature may reach or exceed 40°C (such as inside sheds or metal buildings in summer).*
12. *The charger is designed to operate on standard household electrical power (240 Volts). Do not attempt to use it on any other voltage!*
13. *The battery pack is not fully charged out of the carton. First read the safety instructions and then follow the charging notes and procedures.*
14. *The longest life and best performance can be obtained if the battery pack is charged when the air temperature is between 18 - 24°C. Do not charge the battery pack in an air temperature below 10°C or above 40°C. This is important and will prevent damage to the battery pack.*
15. *Do not incinerate the battery pack even if it is seriously damaged or is completely worn out. The battery can explode in a fire.*
16. *Never attempt to open the battery pack for any reason. If the plastic housing of the battery pack breaks or cracks, immediately discontinue use and do not recharge.*
17. *During charging, the battery must be placed in a well ventilated area.*

Know Your Product

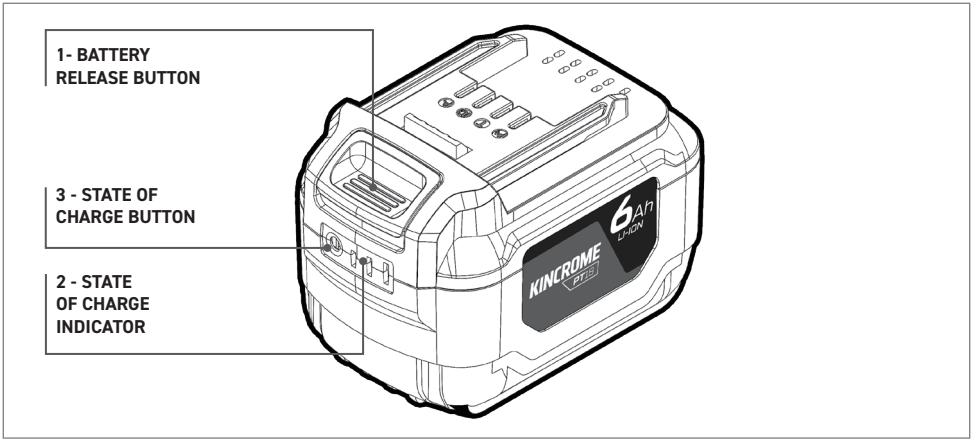

Specifications

K23050		K23051		K23053		K23052	
Voltage	18VDC	**Voltage**	18VDC	**Voltage**	18VDC	**Voltage**	18VDC
Capacity	2Ah	**Capacity**	4Ah	**Capacity**	5Ah	**Capacity**	6Ah
Charge Time 2A Charger	60 mins (Approx)	**Charge Time 2A Charger**	120 mins (Approx)	**Charge Time 2A Charger**	150 mins (Approx)	**Charge Time 2A Charger**	180 mins (Approx)
Charge Time 6A Charger	30 mins (Approx)	**Charge Time 6A Charger**	45 mins (Approx)	**Charge Time 6A Charger**	55 mins (Approx)	**Charge Time 6A Charger**	60 mins (Approx)
Cell Type	Lithium-Ion	**Cell Type**	Lithium-Ion	**Cell Type**	Lithium-Ion	**Cell Type**	Lithium-Ion

Charging

The battery is considered to be a consumable item and its ability to accept charge will reduce over time. We will warranty it against mechanical and electrical defects for a period of three years - this does not cover fair wear and tear.

Ensure battery is fully charged before use. If the battery is not properly charged before first use, or regularly conditioned, its capacity will diminish. Under these circumstances we will not replace the battery even if it is less than three years old.
Note: *The Lithium battery does not suffer from memory effect and once fully charged may be stored for up to six months without another charge.*

How To Insert Battery On Tool

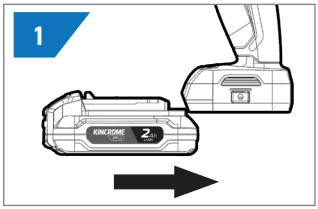

1. ALIGN BATTERY RIBS WITH TOOL

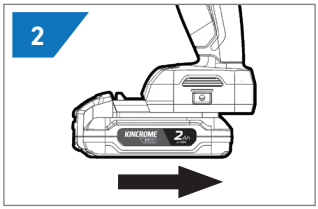

2. SLIDE INTO TOOL

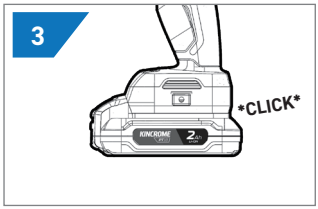

3. STOP WHEN YOU HEAR IT CLICK IN PLACE

Safety & Maintenance

Safety

A safety feature of the Kincrome 18V Li-Ion battery system is that if the Battery Pack is too hot to be charged, the Battery Charger will NOT start charging and the light will remain Green. When the Battery Pack has cooled, the Charger will start charging.
This may take up to 45 minutes.

Maintenance

The batteries have been designed to provide trouble-free life. However, like all batteries, they will eventually wear out. DO NOT disassemble battery pack and attempt to replace the cells. Handling of these batteries, especially when wearing rings and jewellery, could result in serious burns or electric shock.
To obtain the longest possible battery life, remove the battery pack from the charger once it is fully charged and ready for use.

Storage

Store the battery pack where the temperature is below 27°C.

SHORT TERM STORAGE (WEEKLY OR MONTHLY USE)

Fully charge the battery pack and remove from charger. Store in a safe environment below 27°C.

LONG TERM STORAGE (6 MONTHS)

Battery packs should have a charge state of 2 indicator lights. It is recommended that battery packs are discharged to one indicator light (by running in a tool) and charged back up to 2 indicator lights to prevent over discharge (from self discharge).
To charge the battery pack after a six months storage period, it is recommended to discharge the battery about 10%-20% (by running it in a tool) and charge afterwards to maximize the battery lifetime.

Warning!

Do not at any time let brake fluids, gasoline, petroleum based products, penetrating oils, etc., come in contact with plastic parts. Chemicals can damage, weaken or destroy plastic which may result in serious personal injury.

WARNING THE FOLLOWING ACTIONS WILL RESULT IN THE WARRANTY BEING VOID.

- If the tool has been operated on a supply voltage other than that specified on the tool.
- If the tool shows signs of damage or defects caused by or resulting from abuse, accidents or alterations.
- Failure to perform maintenance as set out within the instruction manual.
- If the tool is disassembled or tampered with in any way.

Symbols

The rating plate on your tool may show symbols. These represent important information about the product or instructions on its use.

	Direct current, DC		Waste electrical products should not be disposed of with household waste. Please recycle where facilities exist. Check with your Local Authority or retailer for recycling advice.
	Refer to instruction manual/booklet		
	Avoid & do not operate near or in water.		General warning
	Chemicals are toxic to aquatic wildlife.		Avoid & do not operate near or in open flame.
	Do not use battery in conditions above 40°C		

OFFICE CONTACT DETAILS

Phone: 1300 657 528 Email: enquiries@kincrome.com.au Website: www.kincrome.com.au

22 PAP

WARRANTY

3 YEAR WARRANTY

Our goods and services come with guarantees that cannot be excluded under the Australian Consumer Law. For major failures with the service, you are entitled: -to cancel your service contract with us; and -to a refund for the unused portion, or to compensation for its reduced value. You are also entitled to choose a refund or replacement for major failures with goods. If a failure with the goods or a service does not amount to a major failure, you are entitled to have the failure rectified in a reasonable time. If this is not done you are entitled to a refund for the goods and to cancel the contract for the service and obtain a refund of any unused portion. You are also entitled to be compensated for any other reasonably foreseeable loss or damage from a failure in the goods or service. Kincrome Australia Pty Ltd of 3 Lakeview Drive, Caribbean Park, Scoresby, Victoria (Tel 1300 657 528) also provides the Kincrome Limited Lifetime Guarantee, 5 Year Warranty, 5 Year (3+2) warranty, 3 Year Warranty, 2 Year Warranty and 12-Month Warranty (Kincrome Express Warranties) in respect of some of its products. If a product is covered by a Kincrome Express Warranty and it has materials or workmanship defects (other than defects caused by abnormal or non warranted use) which are covered under the terms of the relevant Kincrome Express Warranty, you can, at your cost, send the product to the above address for repair or replacement. Your rights under a Kincrome Express Warranty are in addition to any other rights you have under the Australian Consumer Law or other applicable laws. For further details and terms please check our product guide, visit www.kincrome.com.au or call us. Every effort is made to ensure advertised stock is available, but due to factors beyond the control of Kincrome Australia Pty. Ltd, not all products advertised in this catalogue may be available at all stores. Kincrome Australia Pty. Ltd. reserves the right to correct printing errors. All sizes shown are approximate only. Accessories shown do not come with the product unless otherwise specified. Due to printing process, colours in this catalogue may vary slightly to actual item. E. & O. E.© Copyright 2022. Reproduction in whole or in part is prohibited without written approval.