KINCROME BLUE STEEL

Side Locker - 4 Shelf

Operation Manual

K77924

IMPORTANT: THIS OPERATING MANUAL CONTAINS IMPORTANT SAFETY INFORMATION, READ CAREFULLY & UNDERSTAND ALL INFORMATION BEFORE OPERATING. SAVE THIS MANUAL FOR FUTURE USE



Do not let children near the Toolbox.



Not suitable for mounting in Vehicles



Set the brake on the locking castors unless your are moving the Toolbox.



Lock drawers and lid before moving the Toolbox.



Specifications

Shelf Load Capacity	20kg
Net Weight	37.3kg
Material	Heavy Gauge Steel
Measurements	L 500 x W 461 x H 1489mm

Parts List



6 X HEX BOLTS



8 X BOLTS FOR CASTOR



6 X WASHERS



4 X ADHESIVE EVA PROTECTORS



1 X LOCKABLE SWIVEL CASTOR



1 X SWIVEL CASTOR

KINCROME

1 X KINCROME BADGE

BLUE STEEL

1 X BLUESTEEL BADGE

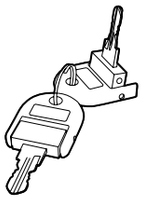

2 X KEYS

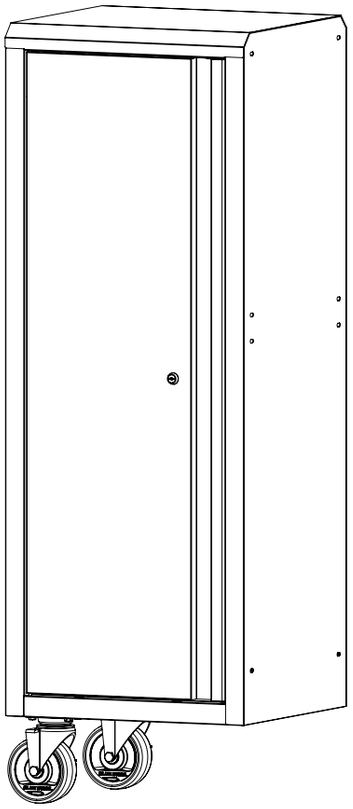

Additional Parts List

(if adding further accessories)
> 6 x hex bolts
> 12 x washers
> 6 x lock nuts

Maintenance

> Periodically tighten all hardware
> Lubricate the lock with graphite annually
> Use a damp Microfibre cloth to clean all surfaces

KINCROME BLUE STEEL

Side Locker - 4 Shelf

Operation Manual

K77924

Assembly Instructions

STEP 1:
The Bluesteel Side locker can be installed on either side of a Kincrome compatible Bluesteel trolley.
Once you have determined your preferred position, install the 4 x Adhesive EVA protectors on the side of the side locker that will sit against the trolley.

STEP 2:
Open the side locker and remove the box containing the castors. close the side locker and lock the door.

STEP 3:
With assistance, lay the side locker on its back and install the castors using the 8 x castor bolts provided. The castors should be installed on the opposite side of the locker that you intend to mount to the trolley. For example if you are mounting the side locker on the left side of a trolley, the castors would be installed on the left front and left rear of the locker. The locking castor should be installed on the front (door side) of the locker.

STEP 4:
Ensure the castor with the lock is in the locked position. With assistance, lift the side locker upright, open the door and balance on the castors while keeping the side locker level. While holding the side locker in position, move the trolley into position against the side locker.
Note: The side locker door can be removed completely to make this step easier if required. follow the steps below under "Reversing the Door" to remove.

STEP 5:
While holding in place, from inside the side locker use the 6 x provided hex bolts and wahsers to fasten securely.

STEP 6:
Install the Kincrome and Bluesteel badges.

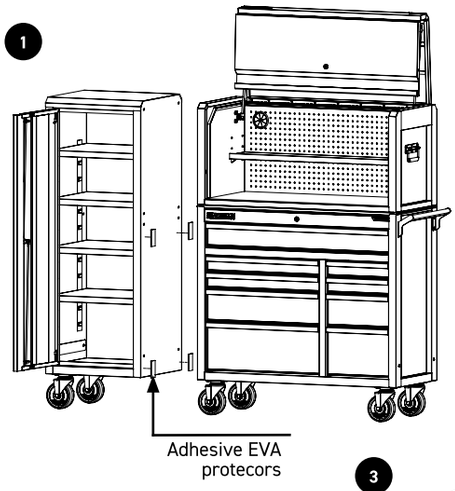

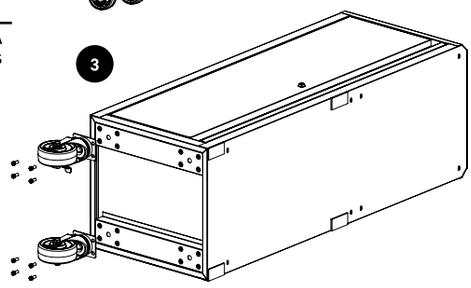

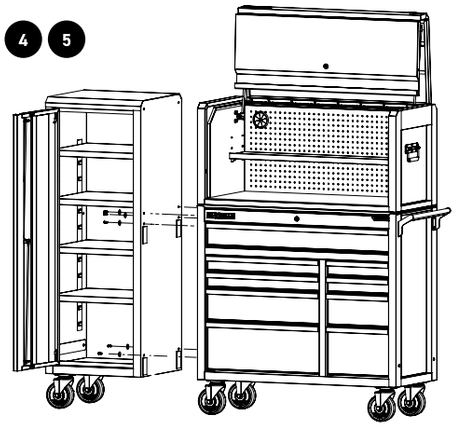

REVERSING THE DOOR
The Side locker door can open in either direction depending on your preference.
Step 1: Open the side locker door, while holding onto the door to stop it from falling, pull the top and bottom door pins and lift the door off. Be careful not to lose the spacer on the bottom pin.
Step 2: Flip the door over to the opposite side. Insert the spacer onto what is now the bottom pin and repeat the previous step in reverse to reinstall the door on the opposite side.

SHELF ADJUSTMENT
Step 1: With an open hand, push up against the bottom of the shelf to disengage it from the locating tabs.
Step 2: Move the shelf to the desired position
Step 3: Push down on the shelf to lock it into the locating tabs

REVERSING THE DOOR

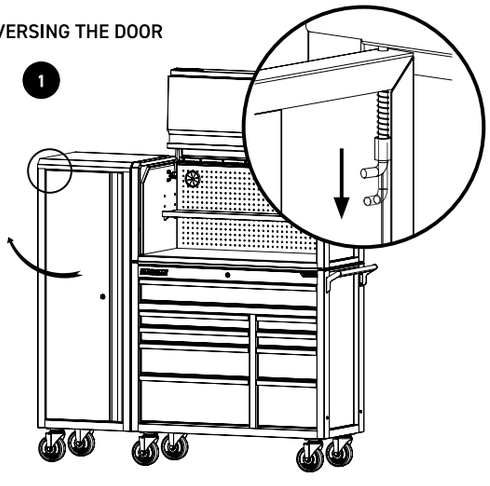

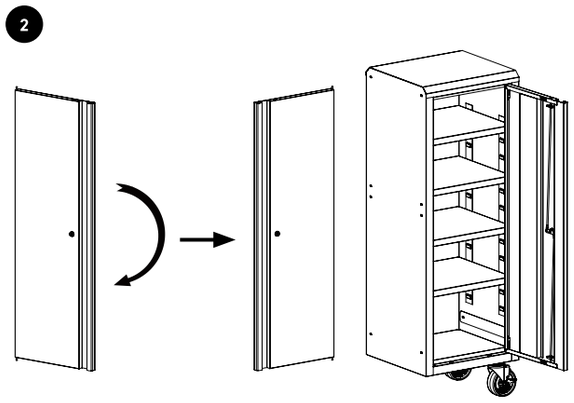

KINCROME BLUE STEEL

Side Locker - 4 Shelf

Operation Manual

K77924

Spare Parts

Ref	Part Number	QTY	Description
1	K7786-1	1	LOCK & KEY
2	K7888	1	KEY ONLY (SPECIFY KEY NUMBER)
3	K77992	1	LOCKABLE SWIVEL CASTOR
4	K77993	1	SWIVEL CASTOR

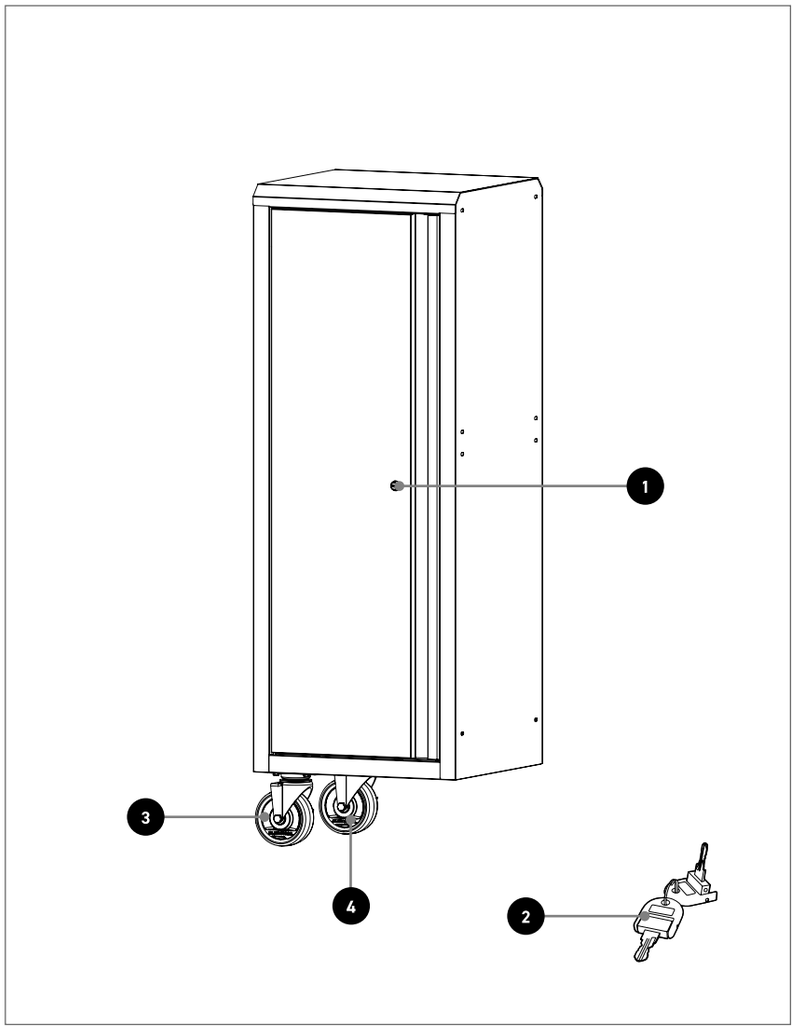

OFFICE CONTACT DETAILS

Phone: 1300 657 528 Email: enquiries@kincrome.com.au Website: www.kincrome.com.au

WARRANTY

2 YEAR WARRANTY

Our goods and services come with guarantees that cannot be excluded under the Australian Consumer Law. For major failures with the service, you are entitled: -to cancel your service contract with us; and -to a refund for the unused portion, or to compensation for its reduced value. You are also entitled to choose a refund or replacement for major failures with goods. If a failure with the goods or a service does not amount to a major failure, you are entitled to have the failure rectified in a reasonable time. If this is not done you are entitled to a refund for the goods and to cancel the contract for the service and obtain a refund of any unused portion. You are also entitled to be compensated for any other reasonably foreseeable loss or damage from a failure in the goods or service'. Kincrome Australia Pty Ltd of 3 Lakeview Drive, Caribbean Park, Scoresby, Victoria (Tel 1300 657 528) also provides the Kincrome Lifetime Guarantee and 12-Month Warranty (Kincrome Express Warranties) in respect of some of its products. If a product is covered by a Kincrome Express Warranty and it has materials or workmanship defects (other than defects caused by abnormal or non warranted use) which are covered under the terms of the relevant Kincrome Express Warranty, you can, at your cost, send the product to the above address for repair or replacement. Your rights under a Kincrome Express Warranty are in addition to any other rights you have under the Australian Consumer Law or other applicable laws. For further details and terms please check our product guide, visit www.kincrome.com.au or call us. Every effort is made to ensure advertised stock is available, but due to factors beyond the control of Kincrome Australia Pty. Ltd, not all products advertised in this catalogue may be available at all stores. Kincrome Australia Pty. Ltd. reserves the right to correct printing errors. All sizes shown are approximate only. Accessories shown do not come with the product unless otherwise specified. Due to printing process, colours in this catalogue may vary slightly to actual item. E. & O. E.© Copyright 2022. Reproduction in whole or in part is prohibited without written approval.

22 PAP

KINCROME BLUE STEEL

MODULAR STORAGE SYSTEM



BUILD THE ULTIMATE COMBO FOR YOUR SPACE







BLUESTEEL® Range

The Kincrome BLUESTEEL® storage series is available in 26", 41" and 54" sizes, with 15 different models to choose from, ensuring a perfect fit for any professional setting. Crafted for those who demand trade-quality durability in a classic style, this range features heavy-duty castors, seamless drawer operation with automatic retention, and is backed by a robust two-year warranty.

Modular Storage System

Whether you have a compact shed or a spacious workshop, the BLUESTEEL® Modular Storage System adapts effortlessly to your tool storage needs. Our system is designed with versatility in mind, complete with a range of accessories to complement the entire collection. From the casual DIY enthusiast to the seasoned professional, BLUESTEEL® has everything you need to keep your tools organised and accessible. Trust in Bluesteel's robust design to protect and secure your tools, no matter the size of your space.

19 Custom Tool Box Trays

Explore our selection of 19 tailored EVA tool box trays to streamline your tool kit. Designed for optimal organisation and accessibility, our EVA trays allow for quick tool identification, enhancing your efficiency and productivity on every job.

Scan me to see the full range

Available at BUNNINGS warehouse

KINCROME BLUE STEEL

MODULAR STORAGE COMPONENTS – TICKED ITEMS WILL FIT YOUR PURCHASE



Add-On Chest 3 Drawer

680mm (26")

Measurements (L x W x H)	680 x 315 x 282mm
Part No	K77213



Tool Chest 6 Drawer

680mm (26")

Measurements (L x W x H)	680 x 315 x 389mm
Part No	K77216



Tool Chest 7 Drawer

680mm (26")

Measurements (L x W x H)	680 x 461 x 497mm
Part No	K77217



Tool Trolley 7 Drawer

680mm (26")

Measurements (L x W x H)	680 x 461 x 1001mm
Part No	K77227



Chest & Trolley Combo 2 Piece 7 Drawer

680mm (26")

Measurements (L x W x H)	680 x 461 x 1366mm
Part No	K77237



Tool Cart 3 Tier

680mm (26")

Measurements (L x W x H)	680 x 461 x 945mm
Part No	K77243



Hutch

1045mm (41")

Measurements (L x W x H)	1045 x 461 x 497mm
Part No	K77410



Tool Chest 8 Drawer

1045mm (41")

Measurements (L x W x H)	1045 x 461 x 497mm
Part No	K77418



Tool Trolley 9 Drawer

1045mm (41")

Measurements (L x W x H)	1045 x 461 x 1001mm
Part No	K77429



Tool Trolley 9 Drawer

1370mm (54")

Measurements (L x W x H)	1370 x 461 x 1001mm
Part No	K77529



Power Tool Holder

3 Slot

Measurements (L x W x H)	416 x 137 x 120mm
Part No	K77921



Side Locker

2 Shelf

Measurements (L x W x H)	389 x 461 x 830mm
Part No	K77922



Side Locker

3 Tier

Measurements (L x W x H)	258 x 461 x 830mm
Part No	K77923



Side Locker

4 Shelf

Measurements (L x W x H)	500 x 461 x 1489mm
Part No	K77924



Side Storage Rack

3 Tier

Measurements (L x W x H)	461 x 120 x 830mm
Part No	K77925

ALSO AVAILABLE - UNIVERSAL TROLLEY MOUNT - K77929 - ALLOWS FITMENT OF SELECT ACCESSORIES TO SOME OLDER BLUESTEEL TROLLEYS