KINCROME®

PROFESSIONAL QUALITY TOOLS

INDUSTRIAL AIR DIE GRINDER STRAIGHT

2 YEAR WARRANTY

LOW AIR CONSUMPTION

ADJUSTABLE SPEED REGULATOR

UNIQUE TWIN BEARING SYSTEM



K13230

ED1 December 15

Table of Contents

Know Your Product 1
General Safety Instructions 2
Additional Safety Instructions 3-4
Operation 4-5
Maintenance & Warranty 5
Parts Breakdown 6

Know your product

1. Air Inlet
2. Exhaust
3. Trigger
4. Trigger Lock-Off
5. ¼" Collet size
6. Speed Selector
7. Spindle Wrench
8. Collet Wrench
9. Nitto Style Fitting

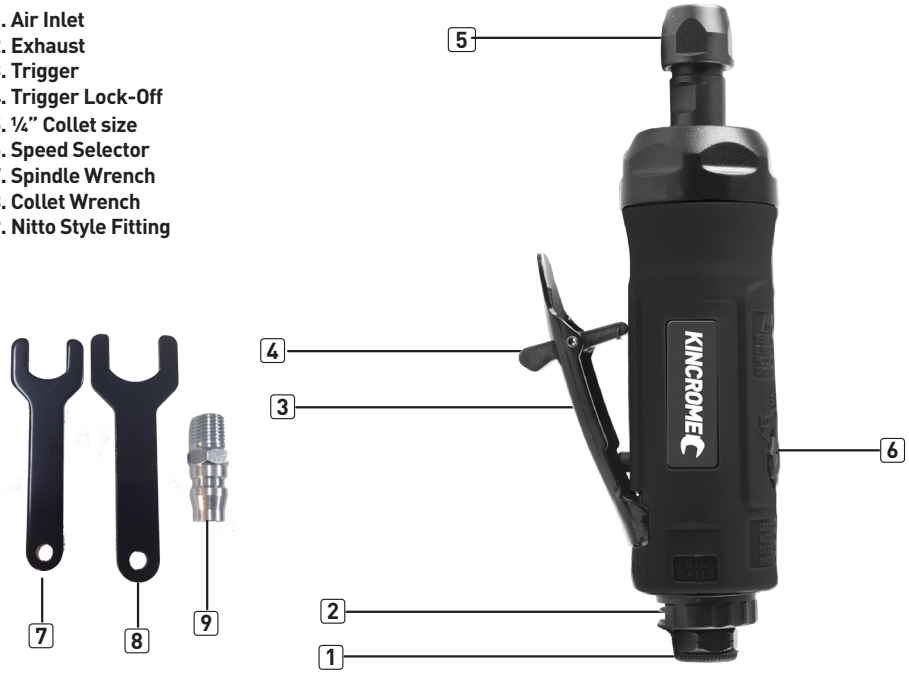

Model No:	K13230
Description:	Industrial Air Die Grinder Straight
Free Speed:	22,000RPM
Collet Size:	¼"
Air Inlet:	¼"
Avg Air Consumption:	99 LPM (3.5CFM)
Air Pressure Maximum:	90PSI
Max Hose Length:	10 Meters
Min. Hose Inner Diameter:	3/8" (10mm)
Overall Length	180mm
Weight	0.57kg

General Safety Warnings

Save all warnings and instructions for future reference.

WARNING! Read all safety warnings and all instructions. Failure to follow the warnings and instructions may result in electric shock, fire and/or serious injury.

1) Work Area

a. Keep the work area clean and well lit. Cluttered benches and dark areas increase the risks of electric shock, fire, and injury to persons.

b. Do not operate the tool in explosive atmospheres, such as in the presence of flammable liquids, gases, or dust. The tool is able to create sparks resulting in the ignition of the dust or fumes.

c. Keep bystanders, children, and visitors away while operating the tool. Distractions can result in the loss of control of the tool.

2) Personal Safety

a. Stay alert. Watch what you are doing and use common sense when operating the tool. Do not use the tool while tired or under the influence of drugs, alcohol, or medication. A moment of inattention while operating the tool increases the risk of injury to persons.

b. Dress properly. Do not wear loose clothing or jewellery. Contain long hair. Keep hair, clothing, and gloves away from moving parts. Loose clothes, jewellery, or long hair increases the risk of injury to persons as a result of being caught in moving parts.

c. Avoid unintentional starting. Be sure the switch is off before connecting to the air supply. Do not carry the tool with your finger on the switch or connect the tool to the air supply with the switch on.

d. Remove adjusting keys and wrenches before turning the tool on. A wrench or a key that is left attached to a rotating part of the tool increases the risk of personal injury.

e. Do not overreach. Keep proper footing and balance at all times. Proper footing and balance enables better control of the tool in unexpected situations.

f. Use safety equipment. A dust mask, non-skid safety shoes and a hard hat must be used for the applicable conditions. Wear heavy-duty work gloves during use.

g. Always wear eye protection. Wear approved safety eye protection**.**

h. Always wear hearing protection when using the tool. Prolonged exposure to high intensity noise can lead to hearing loss.

3) Tool Use and Care

a. Use clamps or other practical ways to secure and support the workpiece to a stable platform. Holding the work by hand or against the body is unstable and can lead to loss of control.

b. Do not force the tool. Use the correct tool for the application. The correct tool will do the job better and safer at the rate for which the tool is designed.

c. Do not use the tool if the switch does not turn the tool on or off. Any tool that cannot be controlled with the switch is dangerous and must be repaired, by an authorised repair agent.

d. Disconnect the tool from the air source before making any adjustments, changing accessories, or storing the tool. Such preventive safety measures reduce the risk of starting the tool unintentionally. Turn off and detach the air supply, safely discharge any residual air pressure, and release the throttle and/or turn the switch to its off position before leaving the work area.

e. Store the tool when it is idle out of reach of children and other untrained persons. A tool is dangerous in the hands of untrained users.

f. Maintain the tool with care. A properly maintained tool is easier to control.

g. Check for misalignment or binding of moving parts, breakage of parts, and any other condition that affects the tool's operation. If damaged, have the tool serviced before using. Many accidents are caused by poorly maintained tools.

h. Use only accessories that are identified by the manufacturer for the specific tool model. Use of an accessory not intended for use with the specific tool model, increases the risk of injury to persons.

4) Service

a. Tool service must be performed only by qualified repair personnel.

b. When servicing a tool, use only identical replacement parts. Use only authorized parts.

c. Use only the lubricants specified by the manufacturer.

5) Additional Safety Warnings

a. The warnings and precautions discussed in this manual cannot cover all possible conditions and situations that may occur. It must be understood by the operator that common sense and caution are factors which cannot be built into this product, but must be supplied by the operator.

b. Only use with accessories rated to handle the speeds exerted by this tool during operation. Other accessories not designed for the speeds generated may break and forcefully launch pieces.

c. Attach all accessories properly to the tool before connecting the air supply. A loose accessory may detach or break during operation.

d. Thoroughly read and understand the manual for the air compressor used to power this tool. Install an in-line shutoff valve to allow immediate control over the air supply in an emergency, even if a hose is ruptured.

e. Use this tool with both hands only. Using tools with only one hand can result in loss of control.

f. Do not lay the tool down until it has come to a complete stop. Moving parts can grab the surface and pull the tool out of your control.

g. Do not force the tool. Use a larger one if needed.

h. Use a clamp or vice to secure the workpiece in place. It is safer than using your hand and keeps both hands free to operate the airtool

i. Do not hold Collet, accessories or adapters during use.

j. Anyone using vibrating tools regularly or for an extended period should first be examined by a doctor and then have regular medical check-ups to ensure medical problems are not being caused or worsened from use. Pregnant women or people who have impaired blood circulation to the hand, past hand injuries, nervous system disorders, diabetes, or Raynaud's Disease should not use this tool. If you feel any symptoms related to vibration (such as tingling, numbness, and white or blue fingers),stop using immediately and seek medical advice as soon as possible.

k. Do not smoke during use. Nicotine reduces the blood supply to the hands and fingers, increasing the risk of vibration-related injury.

l. Wear suitable gloves to reduce the vibration effects on the user.

6) Description of Symbols

The following symbols could be shown on the tool:

	Read the instruction manual before use.		Risk of Explosion
	Wear Ear Protection		Wear Eye Protection
no	No-load speed, Free Speed	**CFM**	Cubic Feet per Minute flow
.../min, RPM	Revolutions or reciprocation per minute	**SCFM**	Cubic Feet per Minute flow at standard conditions
PSI	Pounds per square inch of pressure	**NPT**	National pipe thread, tapered
ft-lb	Foot-pounds of torque	**BPM**	Beats/ Blows per minute
Nm	Newton meters of force	**BSP**	British standard pipe

7) Additional Safety Instructions For Die Grinders

a. Use only burr or stone types that are recommended for your air tool.

b. Make sure the burr or stone is not contacting the work piece before the tool is turned on. Having the burr/stone resting on the work piece before starting the tool could result in the tool kicking as it grips the work piece, this could cause potential personal harm and/or material damage.

c. Check the burr/stone carefully for cracks or damage before operation. Replace cracked or damaged burr/stones immediately.

d. Before operation of the tool an actual work piece, let it run for a few moments. Watch for vibration or wobbling that could indicate poor installation of the burr/stone or a poorly balanced burr/stone.

e. Watch out for flying sparks.

f. Use only burrs/stones having a maximum operating speed at least as high as the "No load speed" marked on the rating label of this tool. Using a burr/stone with a lower maximum speed rating than the tool is dangerous and could result in the burr/stone breaking during use, causing potential personal harm and/or material damage.

g. It should never be necessary to force the tool. If rotational speed drops abnormally, the pressure should be released immediately. Little more than the weight of the tool should be applied. Applying (forcing) excessive pressure can cause dangerous burr/stone breakage or burn out of the tools motor.

Die-Grinder User Instructions

8) Before Starting

TO PREVENT SERIOUS INJURY FROM EXPLOSION:

Verify compressor is off before setup. Use only clean, dry, regulated, compressed air to power this tool. Do not use oxygen, carbon dioxide, combustible gases, or any other bottled gas as a power source for this tool.

1. It is recommended a filter, regulator with pressure gauge, oiler, in-line shut-off valve, and quick coupler be fitted for optimal operation, as shown on Figure A.
2. An in-line shut-off ball valve is an important safety device, it will shut-off the air supply even if the air hose is ruptured. The shut-off valve should be a ball valve because it can be closed quickly.

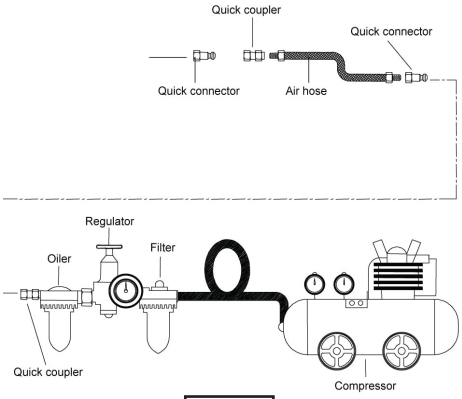

Figure A

Note: If an automatic oiler system is not used, add 4 to 5 drops of Kincrome Air Tool Oil to the air inlet (1) before operation. Add 1-2 drops every hour after continuous use.

3. Attach an air hose to the compressor's air outlet. Connect the air hose to the air inlet (1) of the tool. Other components, such as a quick connect fitting and quick connect coupler, will make operation more efficient, but are not required.

WARNING! Do not install a quick coupler directly on the tool. Couplers contains an air valve that will allow the air tool to retain pressure and inadvertently operate after the air supply is disconnected.

4. The air hose must be long enough to reach the work area and allow free movement while working.
5. Turn on the air compressor according to the manufacturer's directions and allow the tank to build up pressure until it cuts-off.
6. Adjust the air compressor's regulator so that the air output is at the tools recommended working pressure, the output must not exceed the tool's maximum air pressure at any time. Adjust the pressure gradually, while checking the air output gauge to set the optimal pressure range.
7. Inspect all air connections for leaks. Repair any leaks.
8. If the tool is not being used, turn off and detach the air supply, safely discharge any residual air pressure, and release the trigger (3) and/or turn the tools switch to its off position to prevent inadvertent operation.

9) Operation

1. Screw in Nitto Style Fitting (9) to the air inlet (1). Thread (teflon) tape may be required to ensure a leak free seal.
2. Adjust thje ultimate speed of the Die grinder by turning the speed selector (6) left or right, using a flat blade screw driver (screw driver not included).
3. Using the spindle wrench (7) and the collet wrench (8) loosen the Collet nut.
4. Insert a 1/4" diameter shank die-grinder accessory (not included) fully into the Collet. Firmly tighten the Collet nut to lock both the Collet and the die-grinder accessory in place, using the spindle wrench (7) and collet wrench (8).
5. Connect the air hose to the air inlet (1) of the tool.
6. Lightly push the trigger lock-off (4) forward and gently apply pressure to the trigger (3) until the desired speed is achieved.
7. With a firm grip on the tool, lightly apply the die-grinder accessory to the workpiece, slowly and steadily moving the tool until you have acheived the desired finish on the workpeice.
8. If tool requires more power to accomplish task, ensure that the tool is receiving sufficient, un-obstructed airflow (CFM), increase/decrease the pressure (PSI) output of regulator ensuring you do not exceed the rated maximum inlet air pressure of the tool.

Caution: Do not exceed tool's maximum inlet air pressure rating (90 PSI). If tool still does not have sufficient force at maximum pressure and sufficient airflow, then a larger tool may be required.

10) Cleaning, Maintenance, and Lubrication

Note: These procedures are in addition to the regular checks and maintenance explained as part of the regular operation of the air-operated tool.

The air motor and bearing uses compressed air to power the tool. Moisture in compressed air will rust the motor components, you must lubricate the motor daily, with Kincrome air tool oil.

WARNING: To reduce the risk of serious personal injury, turn tool off and disconnect from air supply before making any adjustments, removing/installing attachments or accessories.

Lubrication

1. Disconnect the tool from the air supply holding it so the air inlet (1) faces up.
2. Hold the trigger (3) down and put 4 to 5 drops of Kincrome air tool oil in the air inlet. Holding the trigger down helps circulate oil in the motor.
3. Connect the tool to air supply, cover the exhaust (2) with a towel and run for a few seconds.

WARNING! Any excess oil in the motor is immediately expelled from the exhaust (2) .Always direct exhaust (2) away from people or objects.

Storage

1. Avoid storing the tool in a location subject to high humidity. If the tool is left as it is used, the residual moisture inside the tool can cause rust. Before storing and after operation, oil the tool and run it for a short time.
2. Regular inspection should be carried out of spindles, threads, and clamping devices in-respect of wear and for location of abrasive products.

11) Warranty

Warranty given by Kincrome Australia Pty Ltd of 3 Lakeview Drive, Caribbean Park, Scoresby, Victoria (Tel 1300 657 528).

The applicable warranty period (24 months) commences on the date that the product is purchased. If this product has materials or workmanship defects (other than defects caused by abnormal or non warranted use) you can, at your cost, send the product to place of purchase, an authorised Kincrome service agent or one of Kincromes addresses for repair or replacement. Your rights under this warranty are in addition to any other rights you have under the Australian Consumer Law or other applicable laws. Our goods come with guarantees that cannot be excluded under the Australian Consumer Law. You are entitled to a replacement or refund for a major failure and compensation for any other reasonably foreseeable loss or damage. You are also entitled to have the goods repaired or replaced if the goods fail to be of acceptable quality and the failure does not amount to a major failure. For further details please visit www.kincrome.com.au or call us. Due to minor changes in design or manufacture, the product you purchase may sometimes differ from the one shown on the packaging..

IMPORTANT! If the tool fails to operate correctly, call customer service on 1800 657 528 for advice on the best resolution for your situation. If a resolution cannot be achieved over the phone please take the tool and all related accessories to an authorised service centre or place of purchase showing proof of purchase for assistance.

12) Parts Breakdown

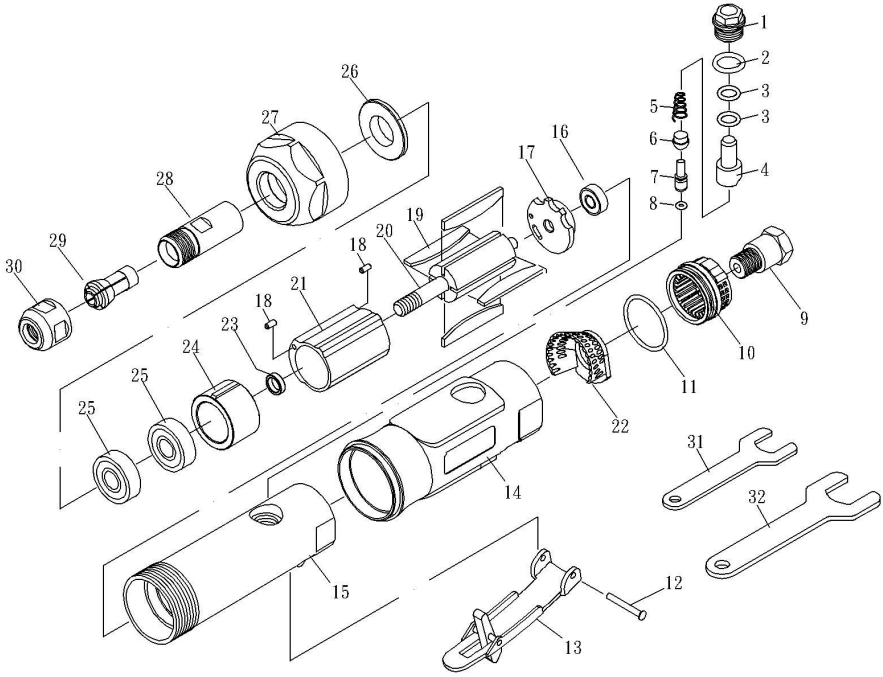

	PARTS NO	DESCRIPTION	Q'TY
	K13230-1	SCREW	1
	K13230-2	O-RING(P12)	1
	K13230-3	O-RING(P8)	2
	K13230-4	AIR REGULATOR	1
	K13230-5	SPRING	1
	K13230-6	VALVE STEM BUSHING	1
	K13230-7	VALVE STEM	1
	K13230-8	O-RING(3.5*1.4)	1
	K13230-9	AIR INLET	1
	K13230-10	EXHAUST SLEEVE	1
	K13230-11	O-RING(26.7*1.78)	1
*	K13230-12	SPRING PIN	1
*	K13230-13	LEVER	1
	K13230-14	PROTECTING RUBBER	1
	K13230-15	HOUSING	1
	K13230-16	BEARING(696ZZ)	1

	PARTS NO	DESCRIPTION	Q'TY
	K13230-17	REAR PLATE	1
	K13230-18	PIN	2
*	K13230-19	ROTOR BLADE	4
	K13230-20	ROTOR	1
	K13230-21	CYLINDER	1
	K13230-22	CONE MUFFLER	1
	K13230-23	BEARING SPACER	1
	K13230-24	FRONT PLATE	1
	K13230-25	BEARING(608ZZ)	2
	K13230-26	WASHER	1
	K13230-27	CLAMP NUT	1
	K13230-28	SPINDLE	1
*	K13230-29	COLLET	1
*	K13230-30	COLLET NUT	1
*	K13230-31	DRIVER WRENCH (14MM)	1
*	K13230-32	COLLET WRENCH (19MM)	1

* Indicated stocked spare parts. We reserve the right to change spare parts at any time without notice.

KINCROME
PROFESSIONAL QUALITY TOOLS

www.kincrome.com.au