

SCISSOR LIFT TABLE

K12300

Distributed by Kincrome Group www.kincrome.com.au

Owner’s Assembly and Operating Manual

SPECIFICATIONS 2
General Safety Instructions 3
UNPACKING SCISSOR LIFT TABLE 4
Unpacking Carton 4
OPERATING SCISSOR LIFT TABLE 4
Preparing Work Area 4
Using the Scissor Lift Table 4
Cleaning 5
Storage 5
Repairing Scissor Lift Table 5
EXPLODED DIAGRAM AND PARTS LIST 6

SPECIFICATIONS

Working Load Limit	300 KG
Height Lowered	290 mm
Height Raised	900 mm
Total Weight:	70 KG
Part Number	K12300

IMPORTANT SAFETY INFORMATION

The use of a Scissor Lift Table has inherent dangers; to avoid risk of personal injury or property damage make sure you are fully aware of the operating instructions for this product, the recommendations in this manual cannot cover all eventualities. This tool is designed and intended for use by properly trained and experienced personnel. If you are not familiar with the proper and safe operation of a Scissor Lift Table, do not use until proper training and knowledge has been obtained.

Do not exceed working load limit of this Scissor Lift Table. This Scissor Lift Table intended for materials handling. Never carry people or allow persons to stand on the lifting table. Do not use for any other purpose accept those listed in this manual.

General Safety Instructions

To operate this appliance safely, the user must have read and understood these instructions before using this appliance.

This appliance is not intended for the use by persons (including children with a reduced physical sensory or mental capabilities, or lack of experience and knowledge, unless they have been given supervision or instructions concerning use of the appliance by a person responsible for their safety. Children should be supervised to ensure they do not play with the appliance.

1. Do not exceed listed weight capacity. Be aware of dynamic loading! Sudden load movement may briefly create excess load causing product failure.
2. Lock Casters when unattended.
3. Be aware of pinch points. Keep hands and feet clear of the lifting mechanism during operation. The Scissor Arm Assembly can cause serious injury when opening or closing. Do not allow anyone near the Scissor Arm Assembly during operation.
4. Use only on a flat, stable, hard surface.
5. Do not make any alterations to this product.
6. Keep clear of load while lifting and lowering.
7. Always lower load slowly.
8. Inspect Scissor lift table before every use; do not use if parts are loose or damaged.
9. Before the first use, check hydraulic fluid level and fill to the top of the fill port as described in maintenance section. Place the Table Assembly on a flat surface which is well lit and safe for assembly. Thoroughly test the Lift Table for proper operation.

UNPACKING SCISSOR LIFT TABLE

Unpacking Carton

Caution: K12300 Scissor Lift Table is heavy please seek appropriate assistance if required.
Place carton in a clear, open area such as garage floor. Remove parts from carton.

Assembly is required so it is important to check all parts are on hand and familiarise yourself with the assembly requirement as detailed in the exploded diagram.

OPERATING SCISSOR LIFT TABLE

Preparing Work Area

Before using the Scissor Lift Table, it is important to prepare work area properly. Follow this procedure each time the Scissor Lift Table is used to help prevent property damage and/or serious injury.

1.) Thoroughly inspect Scissor Lift Table for damage or wear before each use. Briefly test operation before using to work on any job. If supply cord is damaged or machine is malfunctioning DO NOT USE until the problem is corrected.
2.) Consult owner's manual for safety precautions correct use and recommended procedures before using the Scissor Lift Table.
3.) Never use to carry items which overhang the table, Large or heavy objects may cause the table to become unstable and may topple over leading to personal injury and or property damage.
4.) Clear obstructions from work area. Working in tight or cluttered work areas is dangerous.
5.) Ensure Scissor Lift Table and operator are on solid, level ground such as paved or concrete driveway or garage floor. Uneven or sloped surfaces create hazardous working conditions and may dangerously impede the function of the Scissor Lift Table.
6.) Do not exceed listed weight capacity. Be aware of dynamic loading! Sudden load movement may briefly exceed load capacity causing product failure.

Using the Scissor Lift Table

1.) Position the Scissor Lift Table on a smooth surface and apply the wheel brake.
2.) Position the lift table at the appropriate height to easily position the load on center of the work table. Check that the load is center on the table, off center loads can be dangerous.
3.) Lower the Scissor Lift Table to its lowest position and release wheel brake, never move Scissor Lift Table in a raised position.
4.) Raise Scissor Lift Table to the appropriate height to unload the load, always use correct manual handling techniques and seek assistance for heavy loads.

Warning

The Scissor Lift Table is not a work bench and no work should be undertaken on the Scissor Lift Table. Dynamic forces may cause the table to become unstable damaging the Scissor Lift Table and dropping the load.

Cleaning

Unit should be stored clean and dry, the machine wiped over with a clean cloth.
Do not use gasoline, kerosene, or other such solvents or any abrasive cleanser as cleaning agents and solvents may lead to a fire risk.

Storage

Before storage, ensure lift table is lowered to its lowest point and the wheel brake applied.

Repairing **Scissor Lift Table**

There are no user serviceable parts except as outlined above. Only the manufacture, its service agent or similarly qualified person should attempt to repair or replace parts in order to avoid a hazard.

Any modifications to K12300 Scissor Lift Table, except those performed by the manufacturer, or their designee, will void all warranties both written and implied.

EXPLODED DIAGRAM AND PARTS LIST

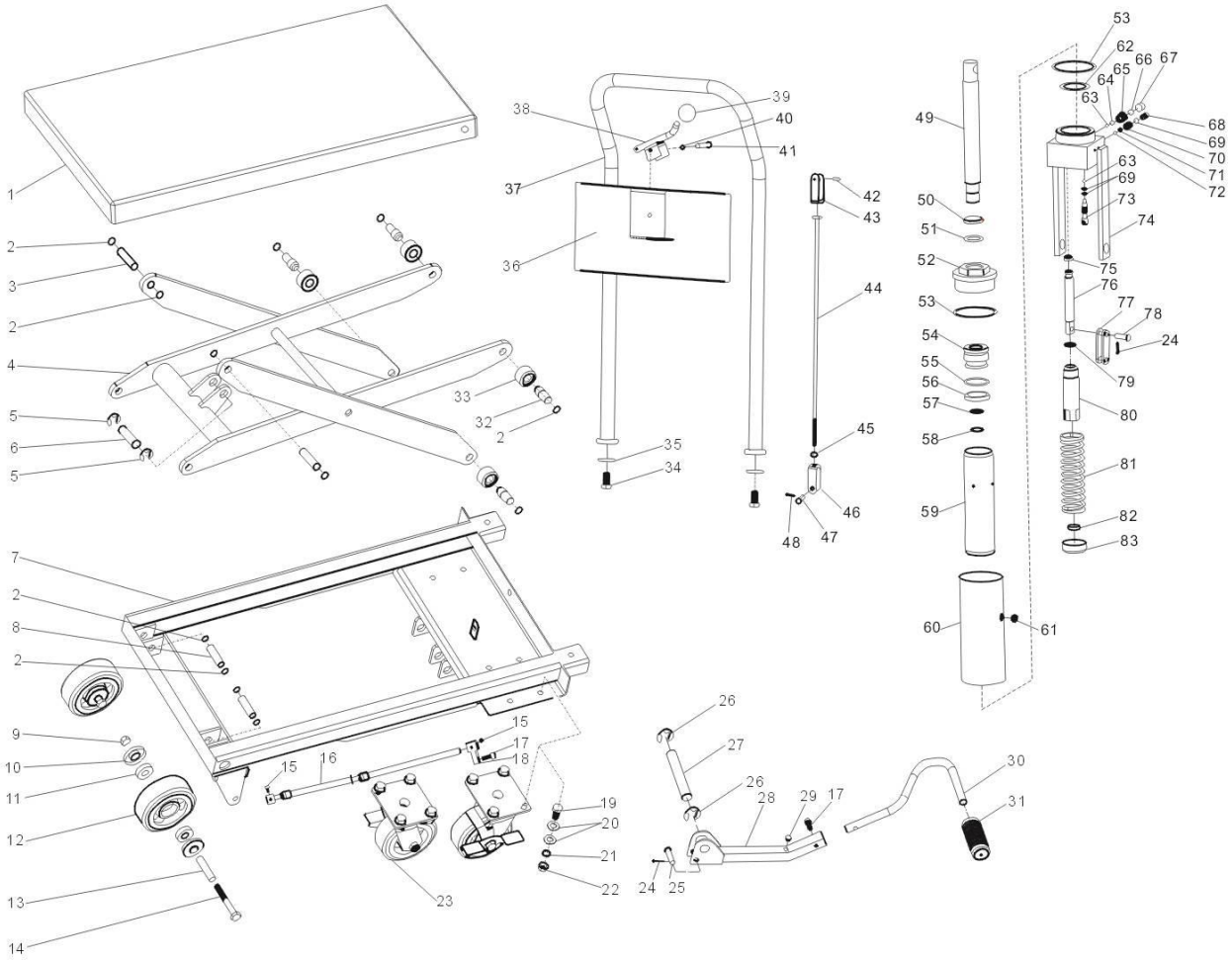

No	DESCRIPTION	SPECIFICATION	QUANTITY	P.S.		No	DESCRIPTION	SPECIFICATION	QUANTITY	P.S.
1	Top table		1			43	Connector		1	
2	Retaining ring	16	12			44	Rod		1	
3	Pin	Φ16×60	2			45	Self-lock nut	M6	1	
4	Lift frame		1			46	Connector		1	
5	Split ring	16	2			47	Pin	Φ8×28	1	
6	Pin	Φ18×60	1			48	Split pin	Φ2.5×25	1	
7	Base Ass'y		1			49	Ram		1	
8	Pin	Φ16×52	2			50	DH03 ring	32×40×5/6.5	1	
9	Self-lock nut	M12	2			51	O-sealing ring	D31.5×3.55	1	
10	Bearing cap		4			52	Cylinder nut		1	
11	Bearing		4			53	Nylon ring	90×80×2	2	
12	Front wheel		2			54	Piston cover		1	
13	Bolt cover		2			55	O-sealing ring	D43.7×3.55	1	
14	Bolt	M12×85	2			56	YXD sealing ring for hole	D50×40×9	1	
15	Hexa screw	M5×8	2			57	O-sealing ring	D21.2×2.65	1	
16	Universal joint Ass'y		1			58	Ring for shaft	26	1	
17	Hexa screw	M8×20	2			59	Cylinder		1	
18	Swing rod		1			60	Reservoir		1	
19	Bolt	M10×35	8			61	Oil plug screw	M10×1	1	
20	Washer	10.5×21×2	16			62	Nylon ring	60×40×2	1	
21	Spring washer	10.2×3×6	6			63	Ball	Φ6	2	
22	Nut	M10	8			64	Ball	Φ9	1	
23	Rear wheels		2			65	Cone spring	D9.5/6.5×Φ0.5×21	1	
24	Split pin	Φ3×25	2			66	Ball	Φ12	1	
25	Pedal rod pin	Φ10×43	1			67	Hexa socket set screw	M16×16	1	
26	Split ring	20	2			68	Pressure-adjusting screw		1	
27	Cylinder seat pin	Φ20×140	1			69	O-ring	D8×1.8	3	
28	Pedal rod		1			70	Pressure-adjusting spring	D7.5×Φ1.9×18	1	
29	Rubber cap		1			71	Spring seat		1	
30	Pedal		1			72	Ball	Φ5	1	
31	Rubber pedal cover		1			73	Oil drain screw		1	
32	Rolling bearing		4			74	Oil valves		1	
33	Roller		4			75	YXD sealing rings for hole	D18×12×8	1	
34	Bolt	M12×40	2			76	Pump piston		1	
35	Plain ring	12.5×35×2.5	2			77	Connector		2	
36	Panel		1			78	Pin	Φ10×33	1	
37	Handle knob		1			79	O-ring	D18×2.65	1	
38	Handle		1			80	Pump cylinder		1	
39	Handle ball		1			81	Spring	D43×Φ5×160	1	
40	Split ring	8	1			82	DH03 ring	18×26×4.5/6	1	
41	Pin	Φ8×40	1			83	Spring cover		1	
42	Thin-head rivet	4×20	1							

Warranty given by Kincrome Australia Pty Ltd of 3 Lakeview Drive, Caribbean Park, Scoresby, Victoria (Tel 1300 657 528). If this product has materials or workmanship defects (other than defects caused by abnormal or non warranted use) you can , at your cost, send the product to place of purchase, an authorized Kincrome service agent or one of Kincrome's addresses for repair or replacement. Your rights under this warranty are in addition to any other rights you have under the Australian Consumer Law or other applicable laws. Our goods come with guarantees that cannot be excluded under the Australian Consumer Law. You are entitled to a replacement or refund for a major failure and compensation for any other reasonably foreseeable loss or damage. You are also entitled to have the goods repaired or replaced if the goods fail to be of acceptable quality and the failure does not amount to a major failure.

For further details please visit www.kincrome.com.au or call us

Distributed by Kincrome Tools and Equipment

www.kincrome.com.au

3 Lakeview Drive Scoresby Victoria

Phone: 1300 657 528

2014 / 02 / 18 (1.0)