KINCROME CONTOUR

Mini Tool Trolley 250mm (10") - 2 Drawer

Operation Manual

K71024. K71024B

Specifications

Net Weight	3kg
Measurements	L 251 x W 151 x H 206mm
Material	Heavy Gauge Steel

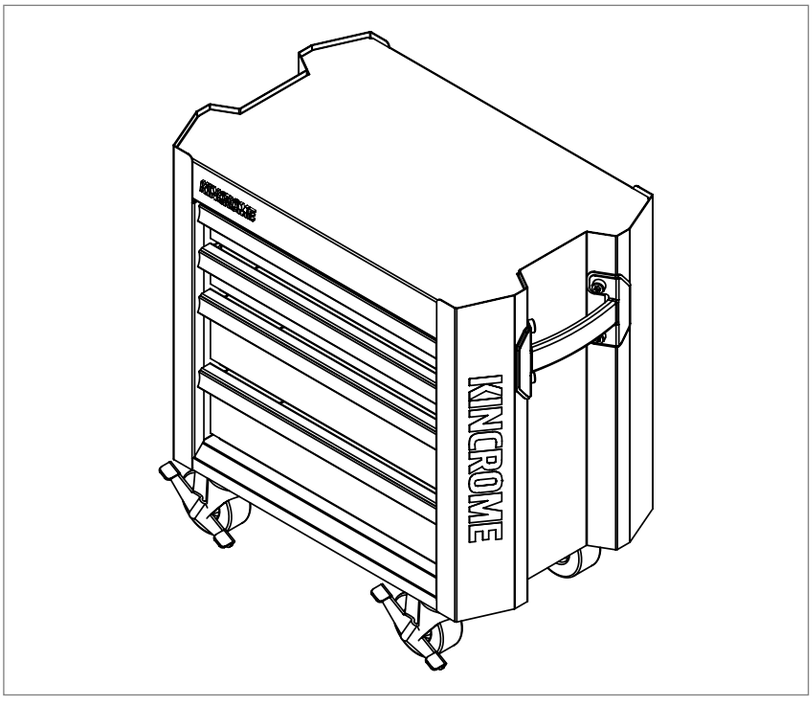

Parts List

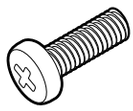

16 X SCREWS

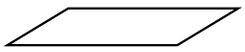

4 X EVA MATS



2 X LOCKABLE SWIVEL CASTORS



2 X SWIVEL CASTORS

Attaching Castors

TOOLS REQUIRED:



NO 2 PHILLIPS SCREWDRIVER

STEP 1:
Carefully lie the Trolley on its side and fit the 4 swivel castors using the screws provided.

STEP 2:

Please ensure they are tightly fastened.

NOTE:
Fix locking Castors at the front of the trolley

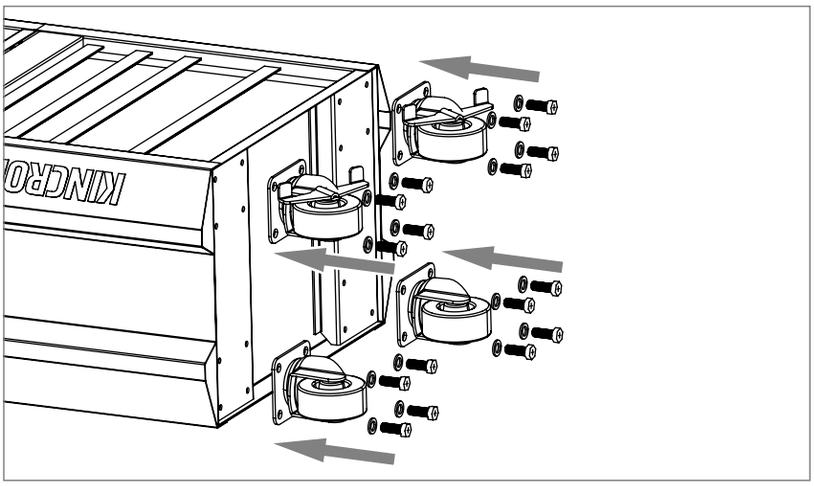

General Safety Warnings



Do not open more than one drawer at a time.



Do not step on drawers.



Do not let children near the Toolbox.



Do not separate Chest from Trolley.



Do not exceed Drawer Load Limit



Not suitable for mounting in Vehicles



Set the brake on the locking castors unless your are moving the Toolbox.



Lock drawers and lid before moving the Toolbox.

OFFICE CONTACT DETAILS

Phone: 1300 657 528 Email: enquiries@kincrome.com.au Website: www.kincrome.com.au

WARRANTY

3 YEAR WARRANTY

Our goods and services come with guarantees that cannot be excluded under the Australian Consumer Law. For major failures with the service, you are entitled: -to cancel your service contract with us; and -to a refund for the unused portion, or to compensation for its reduced value. You are also entitled to choose a refund or replacement for major failures with goods. If a failure with the goods or a service does not amount to a major failure, you are entitled to have the failure rectified in a reasonable time. If this is not done you are entitled to a refund for the goods and to cancel the contract for the service and obtain a refund of any unused portion. You are also entitled to be compensated for any other reasonably foreseeable loss or damage from a failure in the goods or service'. Kincrome Australia Pty Ltd of 3 Lakeview Drive, Caribbean Park, Scoresby, Victoria (Tel 1300 657 528) also provides the Kincrome Limited Lifetime Guarantee, 5 Year Warranty, 5 Year (3+2) warranty, 3 Year Warranty, 2 Year Warranty and 12-Month Warranty (Kincrome Express Warranties) in respect of some of its products. If a product is covered by a Kincrome Express Warranty and it has materials or workmanship defects (other than defects caused by abnormal or non warranted use) which are covered under the terms of the relevant Kincrome Express Warranty, you can, at your cost, send the product to the above address for repair or replacement. Your rights under a Kincrome Express Warranty are in addition to any other rights you have under the Australian Consumer Law or other applicable laws. For further details and terms please check our product guide, visit www.kincrome.com.au or call us. Every effort is made to ensure advertised stock is available, but due to factors beyond the control of Kincrome Australia Pty. Ltd, not all products advertised in this catalogue may be available at all stores. Kincrome Australia Pty. Ltd. reserves the right to correct printing errors. All sizes shown are approximate only. Accessories shown do not come with the product unless otherwise specified. Due to printing process, colours in this catalogue may vary slightly to actual item. E. & O. E.© Copyright 2022. Reproduction in whole or in part is prohibited without written approval.