# TOOL CART 3 Tray
# Part No. K7071

## OPERATION MANUAL

**TRAY LOAD LIMIT: 34.4kg**
**TOTAL LOAD LIMIT: 92kg**



**⚠ IMPORTANT:**

*THIS OPERATING MANUAL CONTAINS IMPORTANT SAFETY INFORMATION. READ CAREFULLY AND UNDERSTAND ALL INFORMATION BEFORE OPERATING TOOL. SAVE THIS MANUAL FOR FUTURE USE.*

## PARTS LIST




**4 x Uprights**

**2 x Tray**

**1 x Base Tray**



**Nut & Bolt Assembly Pack**



**Castor & Bolt Pack**



**2 x Fixed Castors**



**2 x Swivel Castors**

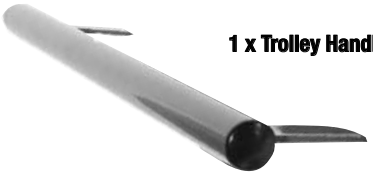

**1 x Trolley Handle**

## TOOLS NEEDED

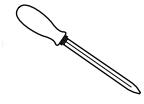

No 3 Screwdriver



10mm Spanner



12mm Spanner

OR



5mm Hex Key

# TOOL CART 3 Tray
# Part No. K7071

## ASSEMBLY INSTRUCTIONS

**Step 1:** Remove all contents from carton and reference the parts list ensuring you have all the parts

**Step 2:** Starting with the base tray attach each vertical upright using the supplied screws and nuts
**NOTE:** Do not fully tighten screws until unit is assembled

**Step 3:** Repeat Step for the top tray, then centre tray

**Step 4:** Tension all screws ensuring they are tight

**Step 5:** Carefully lie the Cart on its side and fit the 4 swivel castors using the bolts and washers provided ensuring they are tightly fastened.
**NOTE:** Install the two locking castors on the same side so they can be easily accessed, we suggest fitting both to the handle side of the cart.

**Step 6:** Stand Cart back on the castors and fit side handle using the bolts provided.

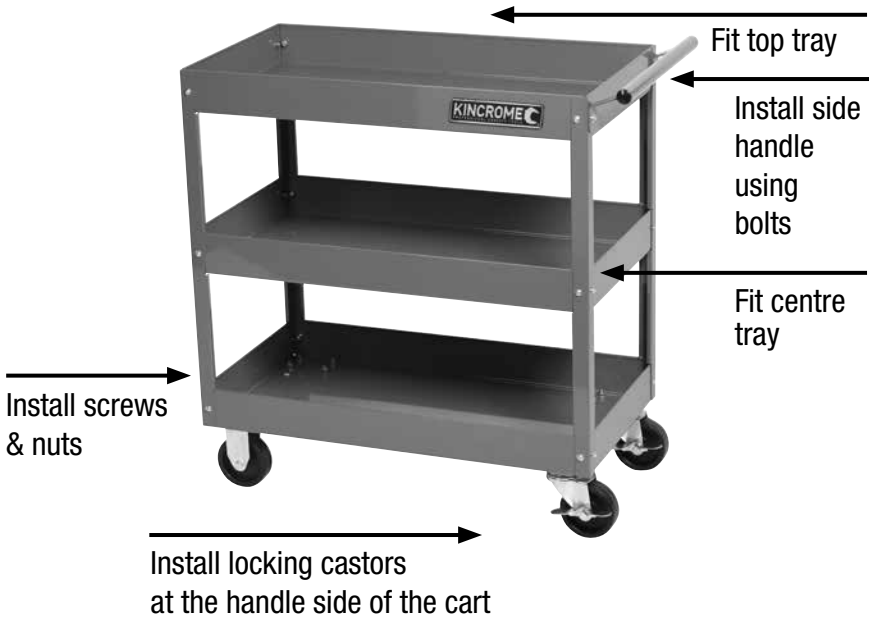


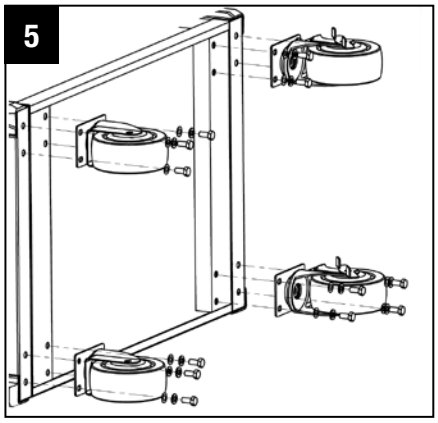




# TOOL CART 3 Tray
# Part No. K7071

## SPARE PARTS




## REPLACEMENT PARTS

| ITEM | PART NO. | DESCRIPTION | QUANTITY |
|---|---|---|---|
| 1 | K7071-1 | Trays | 2 |
| 2 | K7071-2 | Handle | 1 |
| 3 | K7071-3 | Nut & Bolt Assembly Pack | 1 |
| 4 | K7071-4 | Fixed Castor | 2 |
| 5 | K7071-5 | Swivel Castor | 2 |
| 6 | K7071-6 | Upright | 4 |
| 7 | K7071-7 | Bottom Shelf | 1 |

**Caution:** Take Safety Precautions When Using Your Toolbox




Do not open more than one drawer at a time. | Do not step on drawers. | Do not let children near the Toolbox. | Do not separate Chest from Trolley. | Do not exceed Drawer Load Limit | Not suitable for mounting in Vehicles | Set the brake on the locking castors unless your are moving the Toolbox. | Lock drawers and lid before moving the Toolbox.

KINCROME TOOLS + EQUIPMENT™


National Head Office
National Distribution and Showroom
3 Lakeview Dve, Caribbean Business Park
Scoresby Victoria 3179 Australia
ABN 41 007 185 006

Administration
T (03) 9730 7100 F (03) 9730 7199
E enquiries@kincrome.com.au
W kincrome.com.au

Customer Service Centre
T 1300 657 528 F 1300 556 005



Made to Kincrome Tools & Equipment Pty Ltd Global specifications and quality standards in China
Kincrome UK Ltd PO Box 468 Southampton SO30 9EP


| Australia & Global | UK & EU |
|---|---|
| www.kincrome.com.au | www.kincrome.co.uk |
| enquiries@kincrome.com.au | enquiries@kincrome.co.uk |