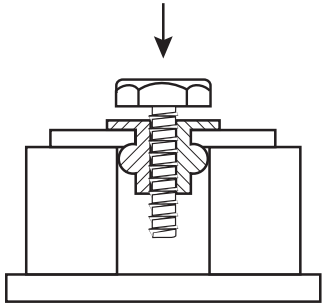

PUSH OUT

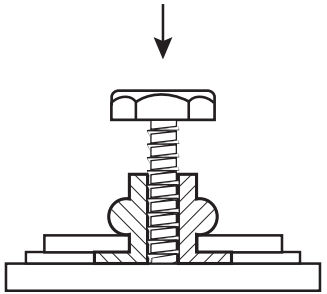

PULL OUT

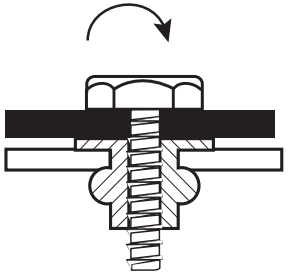

TORQUE TO TURN

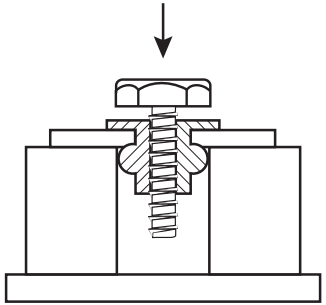

PUSH OUT

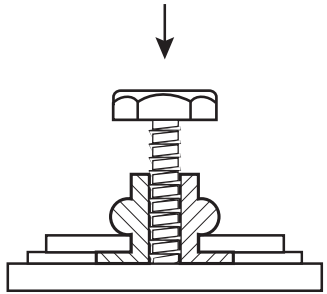

PULL OUT

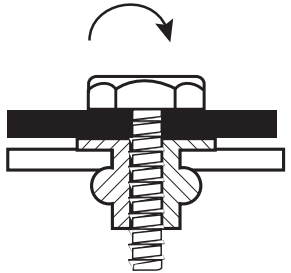

TORQUE TO TURN

Steel Rivet Nuts Load Capacity

Part Number	Thread Size / Plate Thickness	Push out (Kgf)	Pull out (Kgf)	Torque to Turn (Kgf.cm)
K4903	M3 x 0.5 / 1.0mm	120	360	25
K4904	M4 x 0.7 / 2.0mm	215	830	55
K4905	M5 x 0.8 / 2.0mm	310	1090	80
K4906	M6 x 1.0 / 3.0mm	540	1630	130
K4908	M8 x 1.25 / 3.0mm	700	1510	170
K4910	M10 x 1.5 / 3.0mm	1100	2200	350

1 Kgf.cm = 0.098 N.m
Kgf = 9.807N

Aluminium Rivet Nuts Load Capacity

Part Number	Thread Size / Plate Thickness	Push out (Kgf)	Pull out (Kgf)	Torque to Turn (Kgf.cm)
K4953	M3 x 0.5 / 1.0mm	90	200	20
K4954	M4 x 0.7 / 2.0mm	100	400	40
K4955	M5 x 0.8 / 2.0mm	100	500	60
K4956	M6 x 1.0 / 3.0mm	200	800	100
K4958	M8 x 1.25 / 2.0mm	200	1000	200
K4951	M10 x 1.5 / 2.0mm	300	1200	400

1 Kgf.cm = 0.098 N.m
Kgf = 9.807N