KINCROME
PROFESSIONAL QUALITY TOOLS
WORKSHOP



HYDRAULIC BODY REPAIR KIT

Distributed by Kincrome Group www.kincrome.com.au

Owner's Assembly and Operating Manual

SPECIFICATIONS 2
IMPORTANT SAFETY INFORMATION 3
UNPACKING HYDRAULIC BODY REPAIR KIT 3
- Unpacking Carton 3
- Hydraulic Pump 3
- Testing Handle Operation 3

OPERATING HYDRAULIC BODY REPAIR KIT 4
- Preparing Work Area 4
- Using the Body repair kit 4
- Warning 5

MAINTENANCE AND STORAGE 5
- Important Note: 5
- Adding Oil or Replacing Oil: 5
- Cleaning 5
- Storage 6
- Repairing Body repair kit 6
- WARNING 6

SPECIFICATIONS

Working Load limit	10000 KG
Ram Extension	138 mm
Accessories	15 piece

Total Weight:	31 KG
Part Number	K12095

IMPORTANT SAFETY INFORMATION

The use of a Hydraulic Body Repair Kit has inherent dangers; to avoid risk of personal injury or property damage make sure you are fully aware of the operating instructions for this product, the recommendations in this manual can not cover all eventualities. This tool is designed and intended for use by properly trained and experienced personnel. If you are not familiar with the proper and safe operation of a Hydraulic Body Repair Kit, do not use until proper training and knowledge has been obtained.

Do not exceed working load limit of this Body Repair Kit. This Repair Kit is intended for automotive dent and crash repair. Do not use for any other purpose accept those listed in this manual, do not attempt to bend objects that could shatter.

UNPACKING HYDRAULIC BODY REPAIR KIT

Unpacking Carton

Place carton in a clear, open area such as garage floor. Remove case from carton; caution this repair kit is heavy please seek appropriate assistance if required.

No assembly is required so it is important to check all parts are on hand and familiarise yourself with the assembled repair kit. Selection of the correct accessory to suit the job is critical. Capacity of the ram is reduced by utilization of multiple extensions.

Hydraulic Pump

The hydraulic pump is best used on a level surface; if the pump is required to be operated on an angle make sure the outlet hose is facing downward
Turn the release valve slowly clockwise until firm DO NOT over tighten.
Make sure the selected tools are properly installed, and the force is equally applied to both ends of the device.

Testing Handle Operation

Briefly test pump operation as follows BEFORE using. The release valve turned clockwise or counter clock wise allows the hydraulic ram to apply pressure and reduce pressure. To extend the ram, twist release valve clockwise until it is firm. Do not force or tighten beyond this point. Pump handle a few times to extend the ram about halfway. If ram does not begin to extend after a few pumps, check to make sure the release valve is firm. With hydraulic ram extended, twist the release valve slowly counterclockwise to retract the ram. A normal hissing sound may be heard as ram lowers and pressure in hydraulic cylinder is released.

OPERATING HYDRAULIC BODY REPAIR KIT

Preparing Work Area

Before using the body repair kit, it is important to prepare work area properly. Follow this procedure each time the repair kit is used to help prevent property damage and or serious injury.

1.) Thoroughly inspect body repair kit for damage or wear before each use. Briefly test operation of unloaded hydraulic ram before using to work on any job. If ram is damaged or is malfunctioning DO NOT USE until the problem is corrected.

2.) Consult owner's manual for safety precautions correct use and recommended procedures before using the body repair kit. The working load limit of the hydraulic ram is 10000 kg. NEVER EXCEED WORKING LOAD LIMIT OF HYDRAULIC RAM. Utilisation of multiple connections also reduces the working capacity of the tool.

3.) Clear children and others from work area before using the body repair kit. Another adult should be nearby for extra safety and assistance but must be clear of repair area as it is used.

4.) Never use to compress or bend objects that are not securely attached and could be ejected from their position. Do not apply force to objects that could shatter.

5.) Clear obstructions from work area. Working in tight or cluttered work areas is dangerous.

6.) Ensure Body repair kit and operator are on solid, level ground such as paved or concrete driveway or garage floor. Uneven or sloped surfaces create hazardous working conditions and may dangerously impede the function of the body repair kit.

Using the Body repair kit

This hydraulic body repair kit comes with 14 accessory parts to allow for wide variety of applications. The body repair kit is designed to repair and push automotive panels and assemblies.

1.) Place the body repair kit pump on a smooth surface.

2.) Select the correct part for the job to be done. The wrong accessory will create a potentially dangerous situation.

   i. The extensions 02-01, 02-02, 02-03, 02-04, use to achieve desired length, **Caution** the longer the reach the lower the capacity.

   ii. The base 03 normally used on the fixed end to spread the force

   iii. Ram toe 04 and 05 attached to the ram to apply force where the ram head won't fit directly in the available space.

   iv. Wedge head 06 suitable for creating gaps, applying high force to specific area

   v. Cleft Cap 07 used to spread the force on curved surfaces

   vi. Male connector 08 for attaching female end of the ram to a base tool

   vii. Serrated cap 09 used on pushing end to prevent slip

   viii. Rubber head 10 used to push out dents with minimal damage to the panel surface

ix. Spreading wedge used to pry apart damaged panels

3.) Make sure the hydraulic ends on the hose and ram are clean; Inset the hose connector onto the ram and tighten firmly. Keep the plastic covers they will prolong the life of the tool.
4.) Twist release valve on the pump till firm and slowly pump handle until ram is just firm against the two ends of the work piece.
5.) Inspect position of ram, push end and free end; be sure the ram will not slip, is off centre. Also check the free end of the ram is against a firm material, insert a block or the base plate to distribute the force over a larger area.
6.) Pump handle until body repair kit has completed the required operation. Pay attention to work piece position as body repair kit is applying pressure to be sure there is no danger of slipping off or forcing out of the work piece.
7.) SLOWLY twist pump release valve counterclockwise to release pressure. Be aware that the work piece may move when pressure is released.

Warning

The hydraulic body repair kit is not a vice and no work should be undertaken on the work piece while being held by the body repair kit failure to comply with this instruction creates a potentially hazardous working environment.

Never place any part of your body in or around the body repair kit or under any of the moving parts. The forces applied by this body repair kit are large if the ram or tool ends are not properly installed excessive forces can be generated which may lead to property damage or personal injury.

MAINTENANCE AND STORAGE

Important Note:

When adding or replacing oil, always use a good grade Hydraulic Oil. Avoid mixing types of oil. DO NOT use Brake Fluid, Alcohol, Glycerin, Detergent, Motor Oil or Dirty Oil, Improper fluid can cause serious internal damage to hydraulic ram.

Adding Oil or Replacing Oil:

For better performance & longevity, replace oil supply once a year. To drain oil, remove filler screw 23 located at the end of the pump. Pour out old oil then using a suction oil gun inject 500 + 5g of no# 10 hydraulic oil. Do not overfill. Replace filler screw, release valve and pump handle several times to remove any air.

Cleaning

Hydraulic ram should be wiped clean with soft cloth only. Do not use gasoline, kerosene, or other such

solvents or any abrasive cleanser as cleaning agents and solvents will cause deterioration of the hydraulic seals.

Storage

Before storage, loosen pump release valve 1-1/2 turns counterclockwise to release pressure in hydraulic cylinder. Leave valve in this position. Store body repair kit level, in a clean environment preferably indoors, in a dry area to protect from moisture.

Repairing Body repair kit

There are no user serviceable parts except as outlined above. Only trained, licensed and certified repair personnel should attempt any repairs or replacing of parts. Any modifications to this Body repair kit, except those performed by the manufacturer, or their designee, will void all warranties both written an implied.

WARNING

The Hydraulic ram used in this body repair kit is designed for use within the body repair kit only. It is not suitable for any other application. DO NOT use this ram for any form of lifting, it is neither designed for nor suitable for lifting applications.


02.1
02.2
02.3
02.4
02
03
04
05
06
07
08
09
10

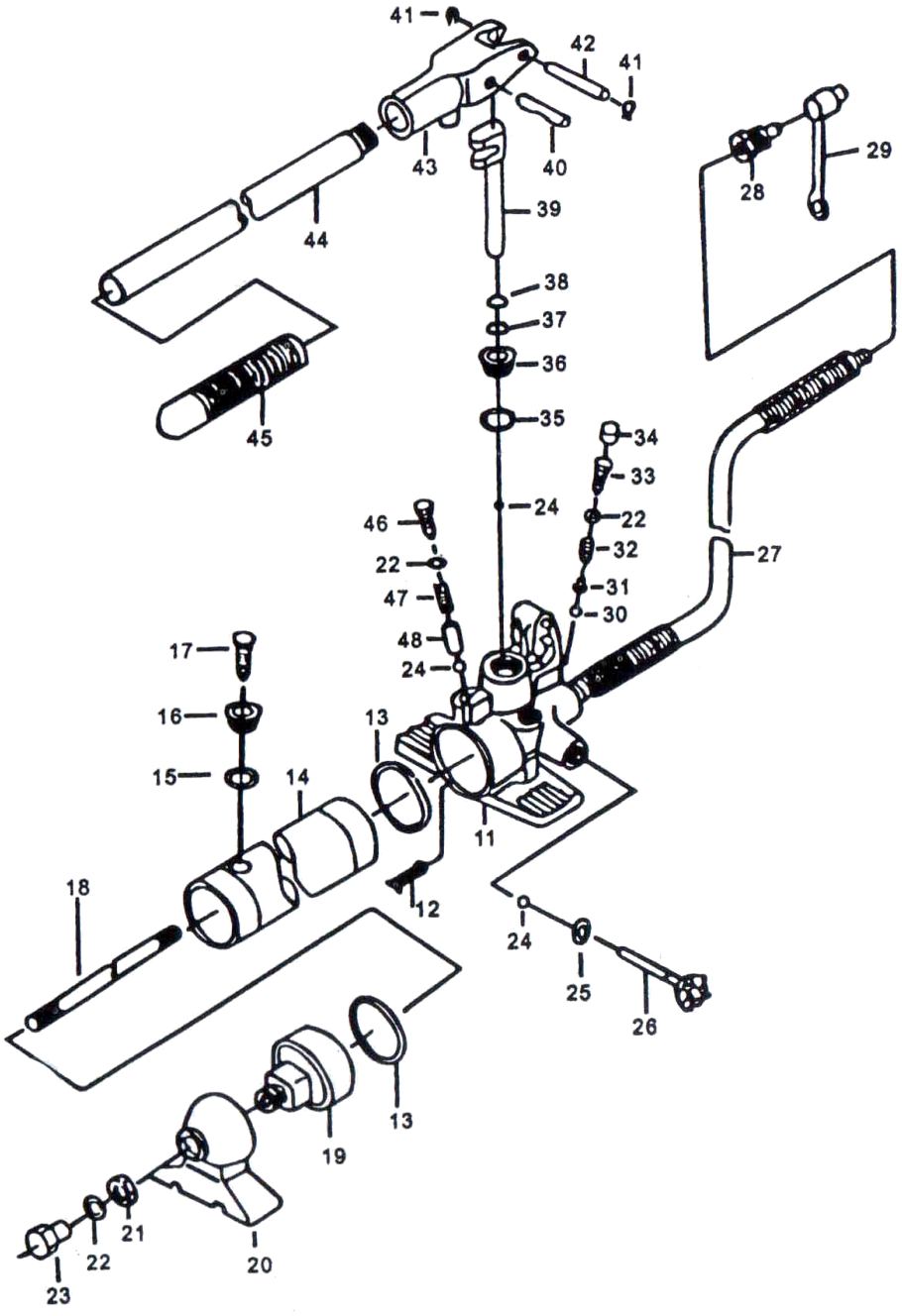
41
42
41
43
40
29
28
39
44
38
37
36
35
45
34
33
24
22
46
32
22
27
31
47
30
48
24
17
16
13
15
14
11
18
12
24
25
26
13
19
21
22
20
23

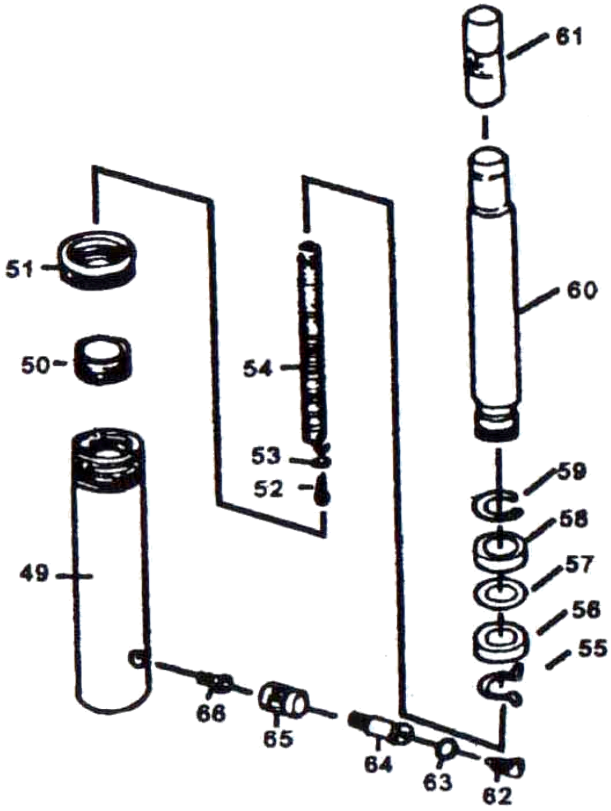

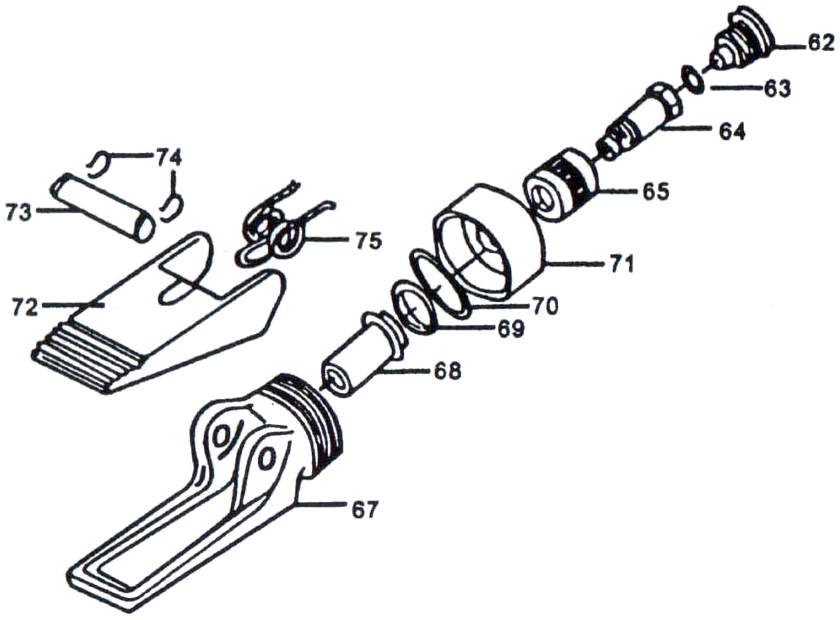

Part No.	Description	QTY	Part No.	Description	QTY

01	Blow mould case	1	21	Nut	1
02	Tube/s	4	22	O-Ring	4
03	Base	1	23	Screw	1
04	Spreader Ram Toe	1	24	Ball	3
05	Plate Head	1	25	O-Ring	1
06	Wedge Head	1	26	Release Valve	1
07	Square Head	1	27	Hydraulic Hose	1
08	Movable Connection	1	28	Coupler	1
09	Serrated Saddle	1	29	Dust Proof Cover	1
10	Rubber Head	1	30	Ball	1
11	Valve Block	1	31	Ball Cup	1
12	Oil Filter	1	32	Spring	1
13	O-Ring	2	33	Screw	1
14	Reservoir	1	34	Screw Protector	1
15	Ring	1	35	O-Ring	1
16	Nut	1	36	Screw	1
17	Breathe Valve	1	37	Nylon Sealing Ring	1
18	Tie Rod	1	38	O-Ring	1
19	Reservoir Cover	1	39	Piston	1
20	Pump Foot	1	40	Pin	1

Part No.	Description	QTY	Part No.	Description	QTY

41	Retaining ring	2	61	Cover	1
42	Pin	1	62	Dust Proof Cover	2
43	Handle Socket	1	63	O-Ring	2
44	Handle	1	64	Cylinder Screw	2
45	Handle Sleeve	1	65	Connection Nut	1
46	Screw	1	66	Screw	1
47	Spring	1	67	Fixed Jaw	1
48	Bushing	1	68	Small Piston	1
49	Cylinder	1	69	Piston Ring	1
50	Ring For Ran	1	70	O-Ring	1
51	Screw Cover	1	71	Screw Cover	1
52	Screw	1	72	Movable Jaw	1
53	Nut	1	73	Pin	1
54	Pull Spring	1	74	Ret	2
55	Retaining Ring	1	75	Retaining Ring	1
56	O-Ring	1		Spring	
57	Nylon Sealing Ring	1			
58	Bushing	1			
59	Retaining Ring	1			
60	Piston Rod	1			

Distributed by Kincrome Group **www.kincromegroup.com**
3 Lakeview Drive Scoresby Victoria
Phone: 1300 657 528