

HYDRAULIC SHOP PRESS

K12093

Distributed by Kincrome Group www.kincrome.com.au

Owner’s Assembly and Operating Manual

SPECIFICATIONS 2
IMPORTANT SAFETY INFORMATION 3
UNPACKING AND ASSEMBLING HYDRAULIC PRESS 3
- Unpacking Carton 3
- Assembly 3
- Testing Handle Pump Operation 4

OPERATING PRESS 4
- Preparing Work Area 4
- Using the Press 5
- Warning 5

MAINTENANCE AND STORAGE 5
- Important Note: 5
- Adding Oil or Replacing Oil: 5
- Cleaning 6
- Storage 6
- WARNING 6
- Repairing Press 6

SPECIFICATIONS

Working Load Limit	10000 KG
Working Range	0-295 mm
Working Width	380 mm
Total Weight:	44 KG
Part Number	K12093

IMPORTANT SAFETY INFORMATION

The use of a Hydraulic Press has inherent dangers to avoid risk of personal injury or property damage make sure you are fully aware of the operating instructions for this product, the recommendations in this manual can not cover all eventualities this press is designed and intended for use by properly trained and experienced personnel. If you are not familiar with the proper and safe operation of a hydraulic press, do not use until proper training and knowledge has been obtained.

. Do not exceed working load limit of this press. This Press is intended for pressing, bending, and straightening purposes only. Do not use for any other purpose except those listed in this manual, never use to compress springs or other objects that could be ejected from the press. Do not compress objects that could shatter.

UNPACKING AND ASSEMBLING HYDRAULIC PRESS

Unpacking Carton

Place carton in a clear, open area such as garage floor. Remove pieces from carton, caution this press is heavy please do not attempt assembly on your own seek appropriate assistance.

Assembly

Press frame #1 is positioned upside down and held vertical.

Attach leg #11 to one side of press. Attach opposite Leg #11 Turn press over and stand on legs – ensure press is stable before proceeding with assembly.

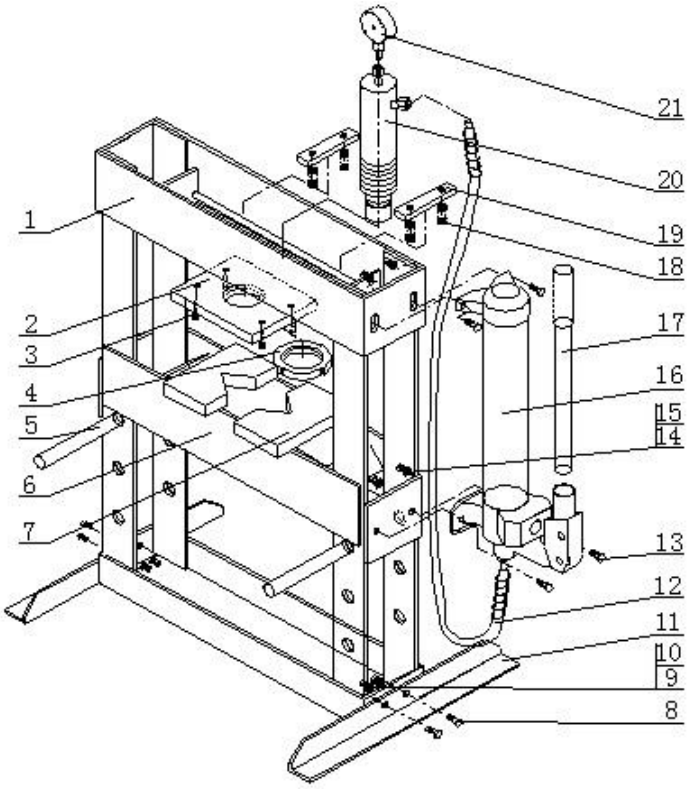

Attach cylinder #20 to the fixed plate #2. Locate cylinder clamp #4 and attach firmly. Attach hand pump #16 to side of press. With hose outlet facing down. Connect hydraulic hose to cylinder. *(Attaching pump with hose outlet at top will reduce capacity of press and accuracy of gauge)*

Insert working table #6 at an angle and then raise to parallel. Hold in place with #5 positioning rods.

Place arbor plates #7 on working table

Testing Handle Pump Operation

Briefly test press operation as follows BEFORE using. Turn release valve clockwise or counter clock wise allows cylinder to be lowered apply pressure and raised reduce pressure. To lower cylinder twist release valve clockwise until firm. Do not force or tighten beyond this point. Pump handle a few times to extend cylinder about halfway. If cylinder does not begin to extend after a few pumps, check to make sure the release valve is firm. With cylinder extended twist release valve slowly counterclockwise to remove pressure and raise cylinder. A normal hissing sound may be heard as cylinder rises and pressure in hydraulic cylinder is released.



OPERATING PRESS

Preparing Work Area

Before using the press, it is important to prepare work area properly. Follow this procedure each time the press is used to help prevent property damage and or serious injury.

1.) Thoroughly inspect press for damage or wear before each use. Briefly test operation of unloaded press before using to press any job. If press is damaged or is malfunctioning DO NOT USE until the problem is corrected.

2.) Consult owner’s manual for safety precautions correct use and recommended procedures before using the press. The working load limit of the press is 10000 kg. NEVER EXCEED WORKING LOAD LIMIT OF PRESS.

3.) Clear children and others from work area before using the press. Another adult should be nearby for extra safety and assistance but must be clear of press as it is used.

4.) Never use to compress springs or other objects that could be ejected from the press. Do not compress objects that could shatter.

5.) Clear obstructions from work area. Working in tight or cluttered work areas is dangerous.
6.) Ensure Press and operator are on solid, level ground such as paved or concrete driveway or garage floor. Uneven or sloped surfaces create hazardous working conditions and may dangerously impede the function of the press.

Using the Press

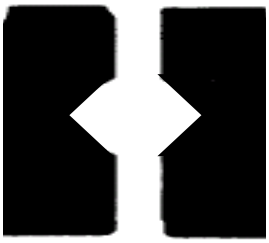

This shop press comes with two arbor plates patterned to allow for wide variety of pressing applications.

1.) Adjust the press working table to the desired height. Consider a comfortable height for the operator and the distance of travel of the jack.
2.) Adjust the cylinder position on the press to best suit the shape of the work piece about to be pressed
3.) Turn release valve clockwise till firm. Slowly pump handle until cylinder just begins to contact the work piece.
4.) Inspect position of cylinder and the arbor plates making sure they are centered and properly engaging the work piece.
5.) Continue pumping handle until press has completed the required operation. Pay attention to work piece position as press is applying pressure to be sure there is no danger of slipping off or forcing out of the work piece.
6.) SLOWLY turn release valve counterclockwise to release pressure. Be aware that the work piece may move when pressure is released.

Warning

The press is not a vice and no work should be undertaken on the work piece while being held by the press failure to comply with this instruction creates a potentially hazardous working environment.
Do not move the press, wherever practical, the press should be bolted to the ground. Never place any part of your body through the frame or under any of the moving parts. The forces applied by this press are large if the arbor plates, press plate or cylinder plate are not parallel excessive forces can be generated which may lead to property damage or personal injury.

MAINTENANCE AND STORAGE

Important Note:

When adding or replacing oil, always use a good grade Hydraulic Oil. Avoid mixing types of oil. DO NOT use Brake Fluid, Alcohol, Glycerin, Detergent, Motor Oil or Dirty Oil, Improper fluid can cause serious internal damage to hydraulic ram.

Adding Oil or Replacing Oil:

For better performance & longevity, replace oil supply once a year. To drain oil, remove filler screw located

at the end of the pump. Pour out old oil then using a suction oil gun inject 500 + 5g of no# 10 hydraulic oil. Do not overfill. Replace filler screw, release valve and pump handle several times to remove any air.

Cleaning

Hydraulic ram should be wiped clean with soft cloth only. Do not use gasoline, kerosene, or other such solvents or any abrasive cleanser as cleaning agents and solvents will cause deterioration of the hydraulic seals.

Storage

Before storage, loosen pump release valve 1-1/2 turns counterclockwise to release pressure in hydraulic cylinder. Leave valve in this position. Store press level, in a clean environment preferably indoors, in a dry area to protect from moisture.

WARNING

The Hydraulic ram used in this shop press is designed for use within the press only. It is not suitable for any other application. DO NOT use this ram for any form of lifting, it is neither designed for nor suitable for lifting applications.

Repairing Press

There are no user serviceable parts except as outlined above. Only trained, licensed and certified repair personnel should attempt any repairs or replacing of parts. Any modifications to this Press, except those performed by the manufacturer, or their designee, will void all warranties both written and implied.

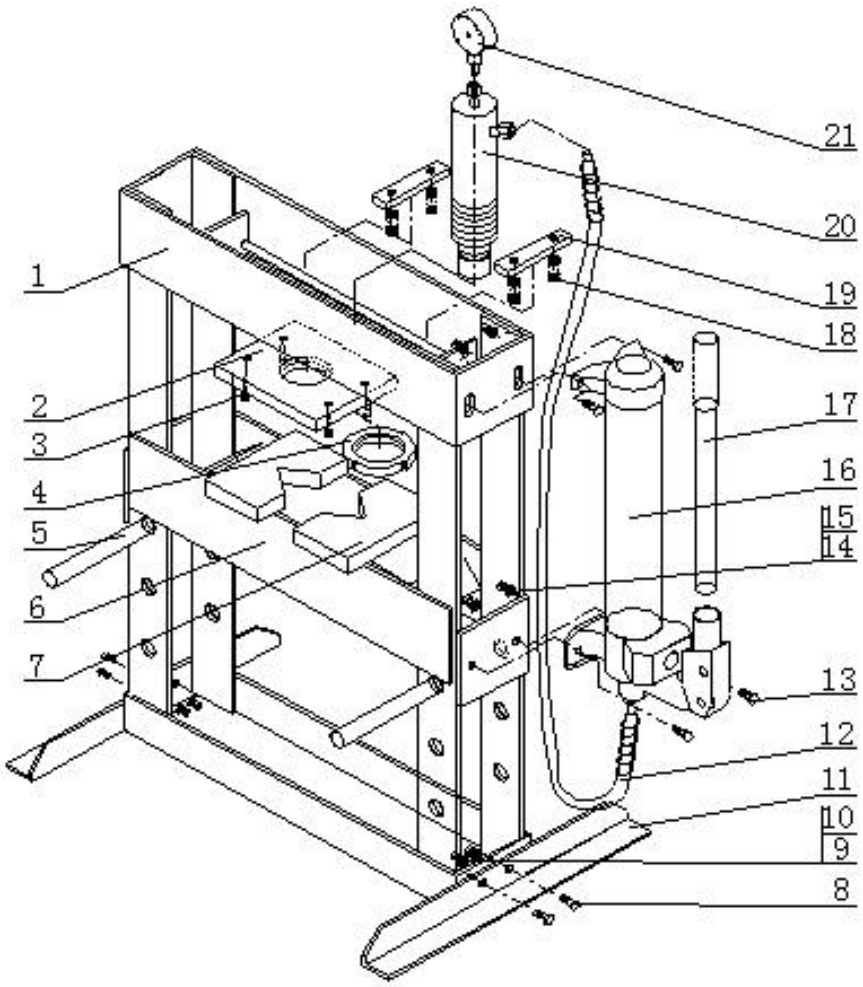

Part No.	Description	Qty	Part No.	Description	Qty
1	Frame	1	12	Hydraulic Hose	1
2	Cylinder Plate	1	13	Bolt M8X25	4
3	Bolt M4X45	4	14	Washer Φ8	4
4	Cylinder Clamp	1	15	Nut M8	4
5	Positioning rods	2	16	Hand Pump	1
6	Work Table	1	17	Handle	1
7	Arbor Plate	2	18	Adjusting Spring	4
8	Bolt M8X25	4	19	Adjusting Plate	2
9	Washer Φ8	4	20	Cylinder	1
10	Nut M8	4	21	Gauge	1
11	Legs	2			

Warranty given by Kincrome Australia Pty Ltd of 3 Lakeview Drive, Caribbean Park, Scoresby, Victoria (Tel 1300 657 528). If this product has materials or workmanship defects (other than defects caused by abnormal or non warranted use) you can , at your cost, send the product to place of purchase, an authorized Kincrome service agent or one of Kincrome's addresses for repair or replacement. Your rights under this warranty are in addition to any other rights you have under the Australian Consumer Law or other applicable laws. Our goods come with guarantees that cannot be excluded under the Australian Consumer Law. You are entitled to a replacement or refund for a major failure and compensation for any other reasonably foreseeable loss or damage. You are also entitled to have the goods repaired or replaced if the goods fail to be of acceptable quality and the failure does not amount to a major failure.

For further details please visit www.kincrome.com.au or call us

Distributed by Kincrome Tools + Equipment

www.kincrome.com.au

3 Lakeview Drive Scoresby Victoria

Phone: 1300 657 528

2013 / 07 / 29 (2.1)