KINCROME
PROFESSIONAL QUALITY TOOLS
WORKSHOP



HYDRAULIC SHOP PRESS

Distributed by Kincrome Group www.kincromegroup.com

Owner’s Assembly and Operating Manual

SPECIFICATIONS 2
IMPORTANT SAFETY INFORMATION 3
UNPACKING AND ASSEMBLING HYDRAULIC PRESS 3
- Unpacking Carton 3
- Assembly 3
- Handle - Handle Wrench 4
- Testing Handle Operation 4

OPERATING PRESS 5
- Preparing Work Area 5
- Using the Press 5
- Warning 5

MAINTENANCE AND STORAGE 6
- Important Note: 6
- Adding Oil: 6
- Replacing Oil: 6
- Cleaning 6
- Storage 6
- Repairing Press 6

SPECIFICATIONS

Working Load limit	12000 KG
Working range	0-710 mm
Working width	400 mm
Total Weight:	44 KG
Part Number	K12091

IMPORTANT SAFETY INFORMATION

The use of a Hydraulic Press has inherent dangers to avoid risk of personal injury or property damage make sure you are fully aware of the operating instructions for this product, the recommendations in this manual can not cover all eventualities this press is designed and intended for use by properly trained and experienced personnel. If you are not familiar with the proper and safe operation of a hydraulic press, do not use until proper training and knowledge has been obtained.

. Do not exceed working load limit of this press. This Press is intended for pressing, bending, and straightening purposes only. Do not use for any other purpose accept those listed in this manual, never use to compress springs or other objects that could be ejected from the press. Do not compress objects that could shatter.

UNPACKING AND ASSEMBLING HYDRAULIC PRESS

Unpacking Carton

Place carton in a clear, open area such as garage floor. Remove pieces from carton, caution this press is heavy please do not attempt assembly on you own seek appropriate assistance.

Assembly



Press frame 2 is positioned upside down and held vertical.
Attach leg and lower cross brace 18 to one side of press. Attach opposite Leg and other end of lower cross brace, bolts are best left finger tight only at this stage.
Attach leg braces 6 to both legs and tighten all bolts firmly
Turn press over and stand on legs – ensure press is stable before proceeding with assembly.

Attach return springs 14 to the cross beam 1. Locate Jack plate 3 and position parallel to cross beam. Insert at an angle and then raise to parallel. Attach return springs to hold jack plate in position.

Insert press plate at an angle and lower to parallel holding in place with pins 17, ensure press plate is parallel by placing pins in holes of equal height.

Position jack on jacking plate by placing top of jack into the retaining ring on the main cross beam, then push the jack slowly to depress the return springs – jack is properly installed when base of jack and jacking plate are in parallel.

Recheck all bolts and nuts are tight and that the assembled press is stable. Ensure jack base is parallel with jack plate. Recheck jack plate springs are properly installed and that pins are full inserted at the same

height to ensure the plate is parallel.

Handle - Handle Wrench

With the jack sitting on the jacking plate place the jack handle wrench over release valve. Turn handle slowly clockwise until firm DO NOT over tighten. Remove handle from release valve and slide handle into handle base on jack.

Testing Handle Operation

Briefly test press operation as follows BEFORE using. With handle on the release valve turning clockwise or counter clock wise allows jack to be raised apply pressure and lowered reduce pressure. To raise jack, twist handle clockwise until it is firm. Do not force or tighten beyond this point. Take handle from release valve and place in handle sleeve, Pump handle a few times to raise jack about halfway. If jack does not begin to rise after a few pumps, check to make sure the release valve is tight. With jack raised, place handle on release valve twist handle slowly counterclockwise to lower jack. A normal hissing sound may be heard as jack lowers and pressure in hydraulic cylinder is released.



OPERATING PRESS

Preparing Work Area

Before using the press, it is important to prepare work area properly. Follow this procedure each time the press is used to help prevent property damage and or serious injury.

1.) Thoroughly inspect press for damage or wear before each use. Briefly test operation of unloaded jack before using to press any job. If jack is damaged or is malfunctioning DO NOT USE until the problem is corrected.
2.) Consult owner's manual for safety precautions correct use and recommended procedures before using the press. The working load limit of the press is 12000 kg. NEVER EXCEED WORKING LOAD LIMIT OF PRESS.
3.) Clear children and others from work area before using the press. Another adult should be nearby for extra safety and assistance but must be clear of press as it is used.
4.) Never use to compress springs or other objects that could be ejected from the press. Do not compress objects that could shatter.
5.) Clear obstructions from work area. Working in tight or cluttered work areas is dangerous.
6.) Ensure Press and operator are on solid, level ground such as paved or concrete driveway or garage floor. Uneven or sloped surfaces create hazardous working conditions and may dangerously impede the function of the press.

Using the Press

This shop press comes with two arbor plates patterned to allow for wide variety of pressing applications.



1.) Adjust the press plate to the desired height. Consider a comfortable height for the operator and the distance of travel of the jack.
2.) Twist jack handle completely clockwise on the release valve. Place handle in sleeve and slowly pump handle until press plate just begins to contact the work piece.
3.) Inspect position of press plate and the arbor plates making sure it is centered and properly engaging the work piece.
4.) Continue pumping handle until press has completed the required operation. Pay attention to work piece position as press is applying pressure to be sure there is no danger of slipping off or forcing out of the work piece.
5.) SLOWLY twist jack handle counterclockwise to release pressure. Be aware that the work piece may move when pressure is released.

Warning

The press is not a vice and no work should be undertaken on the work piece while being held by the press failure to comply with this instruction creates a potentially hazardous working environment.

Do not move the press wherever practical the press should be bolted to the ground. Never place any part of your body through the frame or under any of the moving parts. The forces applied by this press are large if the arbor plates, press plate or jack plate are not parallel excessive forces can be generated which may lead to property damage or personal injury.

MAINTENANCE AND STORAGE

Important Note:

When adding or replacing oil, always use a good grade Hydraulic Jack Oil. Avoid mixing types of oil. DO NOT use Brake Fluid, Alcohol, Glycerin, Detergent, Motor Oil or Dirty Oil, Improper fluid can cause serious internal damage to Jack.

Adding Oil:

With saddle fully lowered & jack on level surface, remove Air Vent Valve. Oil level should be approx 12 mm below valve hole. If low, add oil as needed then close air vent valve.

Replacing Oil:

For better performance & longevity, replace oil supply once a year. To drain oil, open Air Vent Valve and loosen the release Valve by turning handle counterclockwise. BE VERY CAREFUL not to permit dirt or foreign matter to get into the system. Close release valve by turning handle clockwise, fill with good grade Hydraulic Jack Oil close Air Vent Valve wipe away any spilt fluid. Test jack before lifting a load.

Cleaning

Jack should be wiped clean with soft cloth only. Do not use gasoline, kerosene, or other such solvents or any abrasive cleanser as cleaning agents and solvents will cause deterioration of the hydraulic seals.

Storage

Before storage, twist handle 1-1/2 turns counterclockwise to release pressure in hydraulic cylinder. Leave handle in this position. Store press level, in a clean environment preferably indoors, in a dry area to protect jack from moisture.

Repairing Press

There are no user serviceable parts except as outlined above. Only trained, licensed and certified repair personnel should attempt any repairs or replacing of parts. Any modifications to this Press, except those performed by the manufacturer, or their designee, will void all warranties both written an implied.

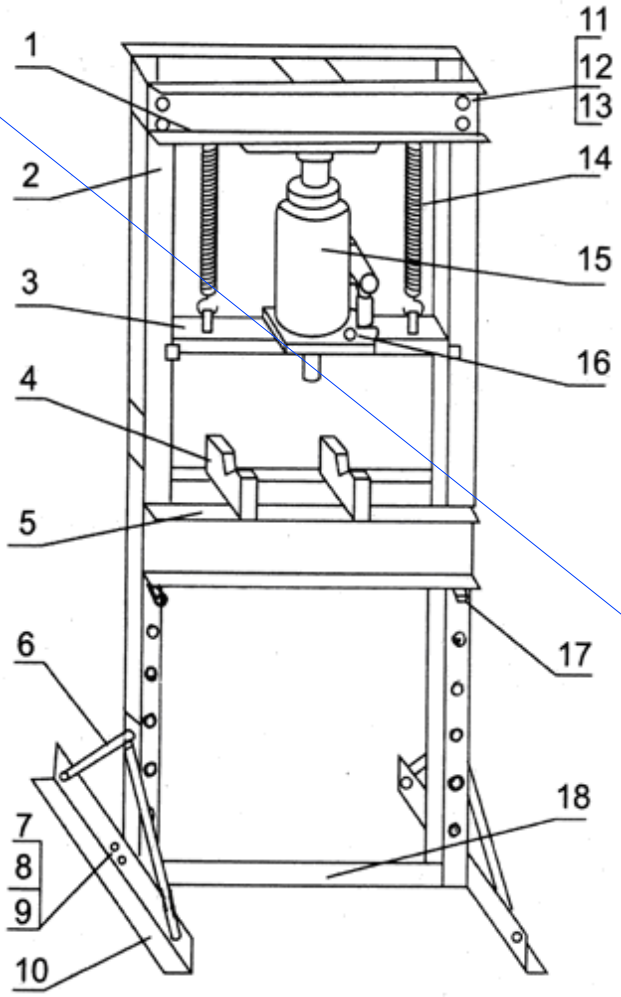

NO	DESCRIPTION	NO	DESCRIPTION
1	CROSS BEAM	10	LEGS
2	PRESS FRAME	11	BOLT (PRE-ASSEMBLED)
3	JACK PLATE	12	WASHER (PRE-ASSEMBLED)
4	ARBOR PLATES	13	NUT (PRE-ASSEMBLED)
5	PRESS PLATE	14	RETURN SPRINGS
6	LEG SUPPORTS	15	HYDRAULIC JACK
7	BOLTS	16	RELEASE VALVE
8	WASHER	17	PINS
9	NUT	18	CROSS BRACE

Need diagram and parts list for 12 ton press?

Assembly instructions need changed to reflect numbering on parts list

Distributed by Kincrome Group **www.kincromegroup.com**
3 Lakeview Drive Scoresby Victoria

Phone: 1300 657 528