KINCROME
PROFESSIONAL QUALITY TOOLS
WORKSHOP



HYDRAULIC PIPE BENDER

Distributed by Kincrome Group www.kincromegroup.com

Owner’s Assembly and Operating Manual

SPECIFICATIONS 2
IMPORTANT SAFETY INFORMATION 3
UNPACKING HYDRAULIC PRESS 3
- Unpacking Carton 3
- Handle - Handle Wrench 3
- Testing Handle Operation 3

OPERATING HYDRAULIC PIPE BENDER 4
- Preparing Work Area 4
- Using the Pipe Bender 4
- Warning 5

MAINTENANCE AND STORAGE 5
- Important Note: 5
- Adding Oil: 5
- Replacing Oil: 5
- Cleaning 6
- Storage 6
- Repairing Pipe bender 6
- WARNING 6

SPECIFICATIONS

Working Load limit	12000 KG
Bending Dies	1/2” to 2”
Total Weight:	38 KG
Part Number	K12085

IMPORTANT SAFETY INFORMATION

The use of a Hydraulic Pipe Bender has inherent dangers to avoid risk of personal injury or property damage make sure you are fully aware of the operating instructions for this product, the recommendations in this manual can not cover all eventualities this tool is designed and intended for use by properly trained and experienced personnel. If you are not familiar with the proper and safe operation of a hydraulic pipe bender, do not use until proper training and knowledge has been obtained.

. Do not exceed working load limit of this pipe bender. This Pipe bender is intended for bending heavy water and galvanised pipe. Do not use for any other purpose accept those listed in this manual, do not attempt to bend objects that could shatter.

UNPACKING HYDRAULIC PRESS

Unpacking Carton

Place carton in a clear, open area such as garage floor. Remove pieces from carton, caution this pipe bender is heavy please seek appropriate assistance if required.

No assembly is required so it is important to check all bolts and nuts are tight and familiarizes yourself with the assembled Pipe Bender. Selection of the correct die to match the diameter of the pipe to be worked on and adjustment of the guide rollers may be required to achieve the required bend.

Handle - Handle Wrench

With the hydraulic ram on a level surface place the handle wrench over release valve. Turn handle slowly clockwise until firm DO NOT over tighten. Remove handle from release valve and slide handle into handle base on hydraulic ram, ram is now ready to be raised.

Testing Handle Operation

Briefly test press operation as follows BEFORE using. With handle on the release valve turning clockwise or counter clock wise allows the hydraulic ram to be raised apply pressure and lowered reduce pressure. To raise the ram, twist handle clockwise until it is firm. Do not force or tighten beyond this point. Take handle from release valve and place in handle base, Pump handle a few times to raise the ram about halfway. If ram does not begin to rise after a few pumps, check to make sure the release valve is tight. With hydraulic ram raised, place handle on release valve twist handle slowly counterclockwise to lower ram. A normal hissing sound may be heard as ram lowers and pressure in hydraulic cylinder is released.



OPERATING HYDRAULIC PIPE BENDER

Preparing Work Area

Before using the pipe bender, it is important to prepare work area properly. Follow this procedure each time the pipe bender is used to help prevent property damage and or serious injury.

1.) Thoroughly inspect pipe bender for damage or wear before each use. Briefly test operation of unloaded hydraulic ram before using to bend any job. If ram is damaged or is malfunctioning DO NOT USE until the problem is corrected.

2.) Consult owner's manual for safety precautions correct use and recommended procedures before using the pipe bender. The working load limit of the hydraulic ram is 12000 kg. NEVER EXCEED WORKING LOAD LIMIT OF HYDRAULIC RAM.

3.) Clear children and others from work area before using the pipe bender. Another adult should be nearby for extra safety and assistance but must be clear of bender as it is used.

4.) Never use to compress bend objects that could be ejected from the bender. Do not try to bend objects that could shatter.

5.) Clear obstructions from work area. Working in tight or cluttered work areas is dangerous.

6.) Ensure Pipe bender and operator are on solid, level ground such as paved or concrete driveway or garage floor. Uneven or sloped surfaces create hazardous working conditions and may dangerously impede the function of the pipe bender.

Using the Pipe Bender

This hydraulic pipe bender comes with six bending die's to allow for wide variety of pipe diameters to be bent. The pipe bender is designed to bend heavy water pipe and galvanised pipe ½" through to 2".

1.) Place the pipe bender on a smooth surface and clamp or bolt into position.

2.) Select the correct die for the diameter of pipe to be bent. The wrong die with cause the pipe to kink or crease.

3.) Adjust the guide rollers to the desired distance to achieve the angle of bend required.
4.) Inset the pipe into pipe bender – for large diameter or long lengths of pipe two people are required one to balance the pipe and the other to operate the pipe bender
5.) Twist jack handle completely clockwise on the release valve. Place handle in sleeve and slowly pump handle until die pushes the pipe is just firm against the guide rollers.
6.) Inspect position of pipe, die, guide rollers and free ends of pipe will not foul or impact on anything or anyone.
7.) Pump handle until pipe bender has completed the required operation. Pay attention to work piece position as pipe bender is applying pressure to be sure there is no danger of slipping off or forcing out of the work piece.
8.) If pipe starts to kink or crease is may help to fill the pipe with sand and securely cap both ends.
9.) SLOWLY twist hydraulic ram release valve counterclockwise to release pressure. Be aware that the work piece may move when pressure is released.

Warning

The hydraulic pipe bender is not a vice and no work should be undertaken on the work piece while being held by the pipe bender failure to comply with this instruction creates a potentially hazardous working environment.

Do not move the pipe bender wherever practical the press should be bolted to the ground. Never place any part of your body through the frame or under any of the moving parts. The forces applied by this pipe bender are large if the die or guide rollers are not properly installed excessive forces can be generated which may lead to property damage or personal injury.

MAINTENANCE AND STORAGE

Important Note:

When adding or replacing oil, always use a good grade Hydraulic Oil. Avoid mixing types of oil. DO NOT use Brake Fluid, Alcohol, Glycerin, Detergent, Motor Oil or Dirty Oil, Improper fluid can cause serious internal damage to hydraulic ram.

Adding Oil:

With ram fully lowered & on level surface, remove Air Vent Valve. Oil level should be approx 12 mm below valve hole. If low, add oil as needed then close air vent valve.

Replacing Oil:

For better performance & longevity, replace oil supply once a year. To drain oil, open Air Vent Valve and loosen the release Valve by turning handle counterclockwise. BE VERY CAREFUL not to permit dirt or foreign matter to get into the system. Close release valve by turning handle clockwise, fill with good grade Hydraulic Oil close Air Vent Valve wipe away any spilt fluid. Test hydraulic ram before applying a load.

Cleaning

Hydraulic ram should be wiped clean with soft cloth only. Do not use gasoline, kerosene, or other such solvents or any abrasive cleanser as cleaning agents and solvents will cause deterioration of the hydraulic seals.

Storage

Before storage, twist handle 1-1/2 turns counterclockwise to release pressure in hydraulic cylinder. Leave valve in this position. Store pipe bender level, in a clean environment preferably indoors, in a dry area to protect from moisture.

Repairing Pipe bender

There are no user serviceable parts except as outlined above. Only trained, licensed and certified repair personnel should attempt any repairs or replacing of parts. Any modifications to this Pipe bender, except those performed by the manufacturer, or their designee, will void all warranties both written an implied.

WARNING

The Hydraulic ram used in this pipe bender is designed for use within the pipe bender only. It is not suitable for any other application. DO NOT use this ram for any form of lifting, it is neither designed for nor suitable for lifting applications.

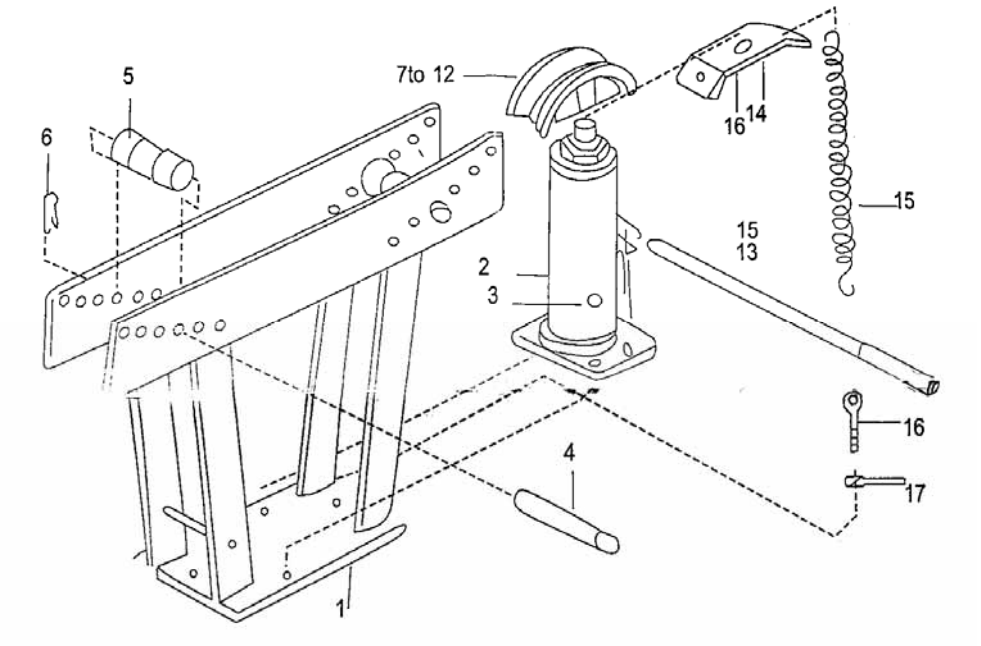

Item	Description	Item	Description	Item	Description
1	Frame	7	1/2” bending die	13	Jack handle
2	12 Ton Ram	8	3/4” bending die	14	Spring Plate
3	Hex bolt	9	1” bending die	15	Spring
4	Roller shaft	10	1-1/4” bending die	16	Eye bolt
5	Guide roller	11	1-1/2” bending die	17	Nut
6	Hitch pin	12	2” bending die		

Distributed by Kincrome Group **www.kincromegroup.com**
3 Lakeview Drive Scoresby Victoria
Phone: 1300 657 528