KINCROME EVOLUTION

Side Locker

2 Drawer
390mm (15")

K7952

Operation Manual

IMPORTANT: This operating manual contains important safety information, read carefully & understand all information before operating the side locker. Save this manual for future use.

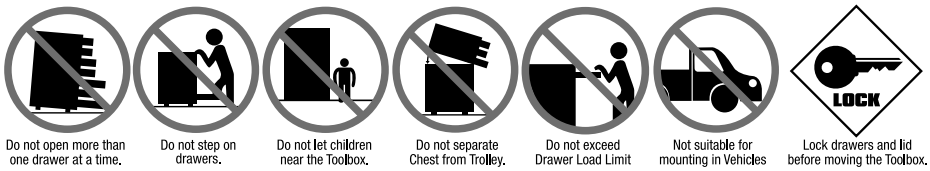

Do not open more than one drawer at a time. | Do not step on drawers. | Do not let children near the Toolbox. | Do not separate Chest from Trolley. | Do not exceed Drawer Load Limit | Not suitable for mounting in Vehicles | Lock drawers and lid before moving the Toolbox.



Parts List



Measurements: **Weight: 26.3kg**

WIDTH	390 mm	**DEPTH**	465 mm	**HEIGHT**	815 mm

Measurements - Top Section

WIDTH	380 mm	**DEPTH**	460 mm	**HEIGHT**	15 mm

Internal Locker

WIDTH	370 mm	**DEPTH**	437 mm	**HEIGHT**	570 mm

Small Drawers

WIDTH	266 mm	**DEPTH**	405 mm	**HEIGHT**	62 mm

Maintenance

- Periodically tighten all hardware
- Lubricate the slides twice a year
- Lubricate the lock with graphite annually
- Use a damp Microfibre cloth to clean all surfaces

Included



Keys x 2



Trolley Handle x 1



3 x Liners

Tools & Assistance Required for Trolley:



2 People

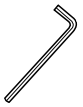

For Handle:
5mm Hex Key

KINCROME EVOLUTION

Side Locker

2 Drawer
390mm (15")

K7952

Assembly Instructions

1 Handle Installing

- Position the trolley side handle behind the holes on the trolley.
- Attach with (4) bolts, and tighten with a 5mm Hex Key.

1



---

2 Installing the Side Locker:

- Step 1: The Evolution Side locker can be installed on either side of the Kincrome Evolution Trolley. With assistance carefully lift the side locker onto either the left or right hand side of the Trolley by interlocking the hanging edge of the side locker to the edge of the trolley
- Step 2: If desired you can reverse the door opening orientation (see instruction below)
- Step 3: You can fit the optional side handle to the side locker if required to either the left or right hand side depending on your preference. Use the hex bolts provided.
- Step 4: Fit the Kincrome Badge

2



3 Reversing the Door:

- The Side locker door can open in either direction depending on your preference. It opens from the left from the factory
- Step 1: Unscrew the door retaining screws while holding the door to keep it from falling
- Step 2: Flip the door over to opposite side of the locker
- Step 3: Reinstall the door screws ensuring they are tight but do not over tighten.

3



4 Shelf Adjustment:

- Step 1: With an open hand, push up against the bottom of the shelf to disengage it from the locating tabs.
- Step 2: Move the shelf to the desired position
- Step 3: Push down on the shelf to lock it into the locating tabs

4



KINCROME EVOLUTION

Side Locker

2 Drawer
390mm (15")

K7952

Maintenance

1 Removing the Drawers

- Fully extend the empty drawer.
- Push up the right grey release lever while pushing down the left grey release lever.
- Pull the drawer outward until it is released from the drawer slide.

2 Re-Inserting The Drawers

- Extend the drawer slides.
- Insert the brackets on each side of the drawer into the slots on the slides, being careful that they are properly positioned.
- Once properly inserted, completely close the drawer to set the slides in their proper positions.

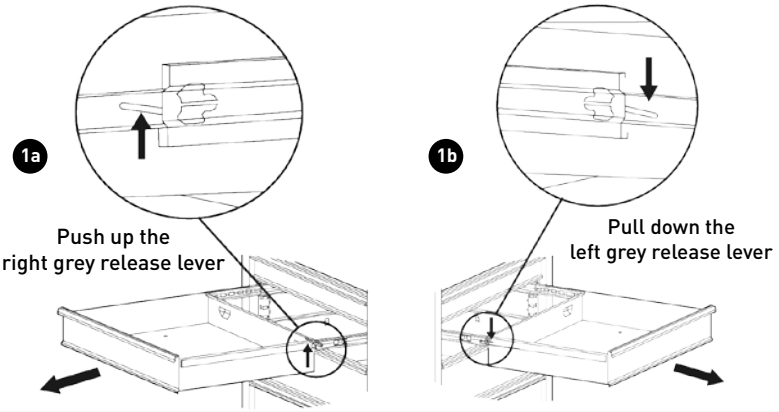

Parts List



Spare Parts

ITEM	PART NO.	DESCRIPTION	QUANTITY
1	K7999-16	Lock & Key	1
2	K7999-11	Key Only (Specify Number)	1
3	K7999-12	Trolley Handle	1
4	K7999-8	Ball Bearing Slide (Pair)	2

ITEM	PART NO.	DESCRIPTION	QUANTITY
5	K7999-28	Eva Mat Pack 3 Pce	1
6	K7999-17	Locker Shelf	2
7	K7999-18	Door Magnet	2
8	K7999-19	Door Handle	1

National Head Office
National Distribution and Showroom
3 Lakeview Dve, Caribbean Business Park
Scoresby Victoria 3179 Australia
ABN 41 007 185 006

Administration
T (03) 9730 7100 F (03) 9730 7199
E enquiries@kincrome.com.au
W kincrome.com.au

Customer Service Centre
T 1300 657 528 F 1300 556 005

Made to Kincrome Tools & Equipment Pty Ltd Global specifications and quality standards in China
Kincrome UK Ltd PO Box 468 Southampton SO30 9EP

Australia & Global	UK & EU
www.kincrome.com.au	www.kincrome.co.uk
enquiries@kincrome.com.au	enquiries@kincrome.co.uk