KINCROME
PROFESSIONAL QUALITY TOOLS
WORKSHOP



ALUMINIUM HYDRAULIC TROLLEY JACK

Distributed by Kincrome Group www.kincromegroup.com

Owner’s Assembly and Operating Manual

SPECIFICATIONS 2
IMPORTANT SAFETY INFORMATION 3
UNPACKING AND ASSEMBLING JACK 3
- Unpacking Carton 3
- Assembling Handle 3
- Testing Handle Operation 3

OPERATING JACK 4
- Preparing Work Area 4
- Lifting Vehicle 5
- Working On Vehicle 5
- Lowering Vehicle 5

MAINTENANCE AND STORAGE 6
- Lubricating 6
- Maintaining Oil Level 6
- Important Note: 6
- Adding Oil: 6
- Replacing Oil: 6
- Cleaning 6
- Storage 6
- Repairing Jack 6

SPECIFICATIONS

Working Load limit	1000 KG
Height lowered	80 mm
Height raised	375 mm
Handle Length	975 mm
Total Weight:	12.5 KG
Part number	K12063

IMPORTANT SAFETY INFORMATION

The use of a vehicle jack has inherent dangers to avoid risk of personal injury or property damage make sure you are fully aware of the operating instructions for this product, the recommendations in the vehicle owners manual for jacking of your vehicle prior to lifting the vehicle. Do not exceed maximum lifting capacity of this jack. This jack is intended for automotive use only. Be aware that large or heavy vehicles may exceed jack's stated capacity check vehicle owners manual or contact the vehicle manufacturer. Do not use for any other purpose accept the raising and lower of vehicles, Never use to raise any structure or building, Do not lift any human load and never ride on jack.

UNPACKING AND ASSEMBLING JACK

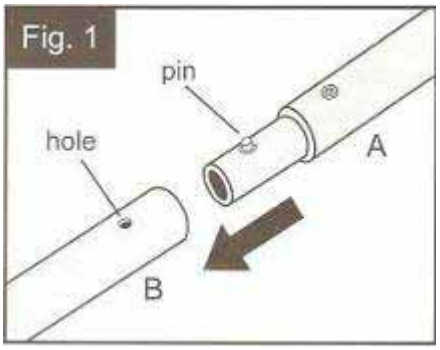

Unpacking Carton

Place carton in a clear, open area such as garage floor. Remove jack and two handle pieces from carton.

Assembling Handle

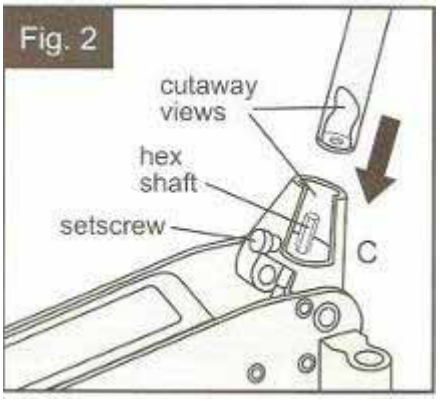

Insert handle piece (A) into handle piece (B) making sure spring-loaded pin locks into the hole (Fig.1). With the jack sitting on its wheels on a flat surface, slide assembled handle into handle base (C), rotate until the hex-shaped hole slips over shaft in handle base (Fig.2). Check again to be sure handle is fitted properly using finger pressure only. Loosen 1/2 turn handle should rotate easily.

At the rear of jack a large wire retaining clip holds handle base (Fig.2, part C) flat against the jack.

While keeping handle pushed down in compressed position, carefully remove clip by pulling two ends of wire out of holes in jack with pliers. Release pressure on handle base. Slide looped end of wire clip out of handle base and discard.

Testing Handle Operation

Briefly test jack operation as follows BEFORE using to lift any

Load. Twisting handle tightens or releases valve which allows jack to be raised and lowered. To raise jack, twist handle completely clockwise until it stops. Do not force or tighten beyond this point. Pump handle a few times to raise jack about halfway. If jack does not begin to rise after a few pumps, check to be sure handle is correctly inserted into handle base and is fitted over hex shaft. With jack raised, twist handle slowly counterclockwise to lower jack. A normal hissing sound may be heard as jack lowers and pressure in hydraulic cylinder is released.

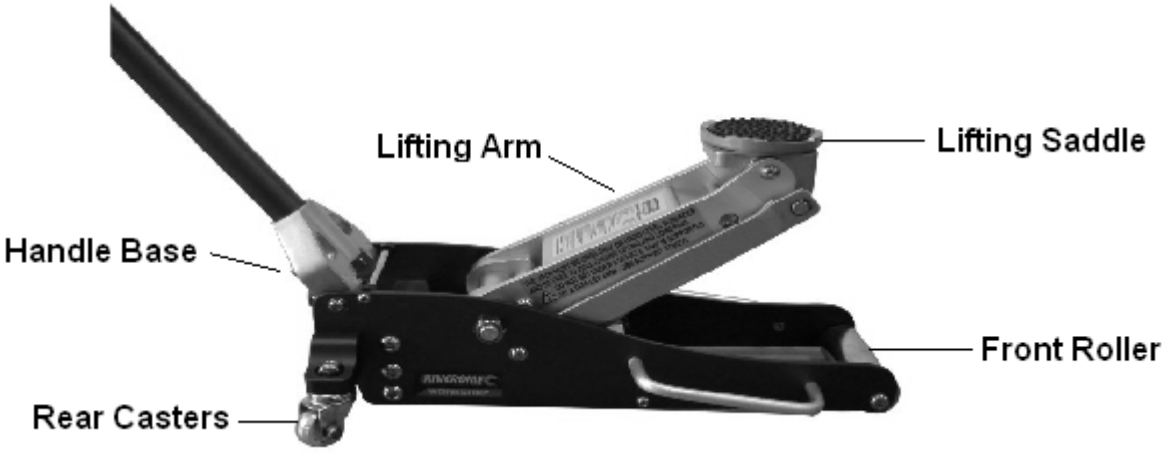

OPERATING JACK

Preparing Work Area

Before using jack to life vehicle, it is important to prepare work area properly. Follow this procedure each time the jack is used to help prevent property damage and or serious injury.

1.) Thoroughly inspect jack for damage or wear before each use. Briefly test operation of unloaded jack before using to lift any load. If jack is damaged or is malfunctioning DO NOT LIFT ANY LOAD until the problem is corrected.

2.) Consult vehicle owner's manual for safety precautions, jacking procedure, vehicle weight, recommended jack type, and location of jack support areas on vehicle. The working load limit of the jack is 1000 kg. NEVER EXCEED WORKING LOAD LIMIT OF JACK.

3.) Clear children and others from work area before moving or lifting vehicle. Another adult should be nearby for extra safety and assistance but must be clear of vehicle as it is moved or lifted.

4.) No person should remain in a vehicle that is being lifted by a jack, No person should enter a vehicle which is supported by a jack or by vehicle support stands. No person should lean into a vehicle which is supported by a jack or by vehicle support stands.

5.) Clear obstructions from work area. Working in tight or cluttered work areas is dangerous.

6.) Be sure jack and vehicle are on solid, level ground such as paved or concrete driveway or garage floor so the jack is free to roll during lifting and lowering. Uneven or sloped surfaces create hazardous working conditions and dangerously impeded the function of the jack.

7.) With vehicle in proper position, set vehicle's parking brake or emergency brake and put gearshift in park (manual transmissions should be placed in lowest gear). TURN VEHICLE IGNITION OFF AND TO THE "LOCK" POSITION making sure steering wheel locks.

8.) Do not rely on vehicle transmission or brakes to hold vehicle in position. Chock all wheels of vehicle not being lifted off the ground to prevent vehicle rolling. Using wedge-shaped blocks that tire cannot roll over, position one chock tight against the tyre in both forward and reverse rolling paths.

9.) Jack stands, Vehicle support stands (not included) will be needed to support vehicle once it is in raised position. Have jack stands, vehicle support stands capable of supporting vehicle weight ready nearby for use. Read and understand jack stand manufacturer's instructions and safety information before use and

before lifting the vehicle with this jack.

10.) Plan location of jack beneath vehicle, making sure jack will be contacting only a jack support area of vehicle. Consult vehicle owner's manual for location of jack support areas.

Lifting Vehicle

Lifting a vehicle using a jack can be dangerous. Follow all instructions and precautions below. Do not lift any vehicle with its engine running or start any vehicle that is supported by jack or jack stands.

1.) With lifting arm completely lowered, roll jack into position beneath jack support area of vehicle.
2.) Twist jack handle completely clockwise. Slowly pump handle until lifting saddle just begins to contact support area on underside of vehicle.
3.) Inspect position of lifting saddle beneath support area, making sure it is centered and properly engaging support area.
4.) Continue pumping handle until vehicle is lifted to desired height. Pay attention to lifting saddle position as vehicle is being raised to be sure there is no danger of support area slipping off or lifting from the saddle.
5.) Place jack stands under additional vehicle support areas.
6.) SLOWLY twist jack handle counterclockwise to ease vehicle down onto jack stands.

Working On Vehicle

Any vehicle being supported by a jack or jack stands creates a potentially hazardous working environment. Do not move or roll a jack that is supporting a vehicle. Never place any part of your body beneath a vehicle supported by a jack. Be careful of forces applied to vehicle such as torque on a nut or bolt. These forces could cause vehicle to become unstable on jack stands if jack stands are not properly placed. Do not turn vehicle ignition or attempt to start any vehicle supported by jack or jack stands.

Lowering Vehicle

Before lowering vehicle, be sure area under and near vehicle is clear of all persons and obstructions.

1.) Re-position jack under same support area used to lift vehicle.
2.) Twists handle completely clockwise. Pump handle until lifting saddle just makes contact with support area under vehicle.
3.) Check to be sure lifting saddle is centered under support area. Slowly pump handle to lift vehicle off from jack stands.
4.) Remove jack stands, setting them aside, well clear of vehicle.
5.) With firm grip on jack handle, SLOWLY twist handle counterclockwise until jack just begins to lower.
6.) Carefully control speed of descending vehicle. Lowering a vehicle too fast can cause property damage or injury.

MAINTENANCE AND STORAGE

Lubricating

Moving parts on jack should be lubricated occasionally with a light machine oil to maintain efficient operation. Apply oil to joints on lift arm hinges, push rods, handle base, rear caster wheels, front roller, etc.(refer to pages 6-7 for location of these parts).wipe away excess oil with soft cloth.

Maintaining Oil Level

Important Note:

When adding or replacing oil, always use a good grade Hydraulic Jack Oil. Avoid mixing types of oil. DO NOT use Brake Fluid, Alcohol, Glycerin, Detergent, Motor Oil or Dirty Oil, Improper fluid can cause serious internal damage to Jack.

Adding Oil:

With saddle fully lowered & jack on level ground, remove Air Vent Valve. Oil level should be approx 12 mm below valve hole. If low, add oil as needed then close air vent valve.

Replacing Oil:

For better performance & longevity, replace oil supply once a year. To drain oil, open Air Vent Valve and loosen the release Valve by turning handle counterclockwise. BE VERY CAREFUL not to permit dirt or foreign matter to get into the system. Close release valve by turning handle clockwise, fill with good grade Hydraulic Jack Oil close Air Vent Valve wipe away any spilt fluid. Test jack before lifting a load.

Cleaning

Jack should be wiped clean with soft cloth only. Do not use gasoline, kerosene, or other such solvents or any abrasive cleanser as cleaning agents and solvents will cause deterioration of the hydraulic seals.

Storage

Before storage, twist handle 1-1/2 turns counterclockwise to release pressure in hydraulic cylinder. Leave handle in this position. Store jack level, in a clean environment preferably indoors, in a dry area to protect jack from moisture.

Repairing Jack

There are no user serviceable parts except as outlined above. Only trained, licensed and certified repair personnel should attempt any repairs or replacing of parts. Any modifications to this jack, except those performed by the manufacturer, or their designee, will void all warranties both written an implied.

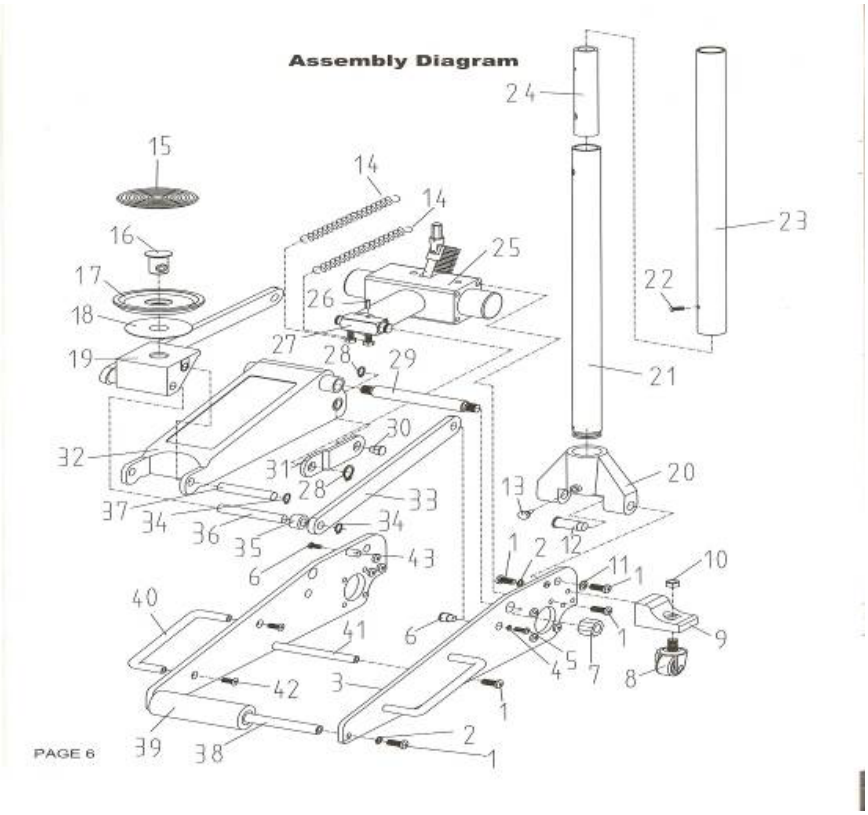

No	Description	Qty	No	Description	Qty
1	BOLT M10X25	16	23	HANDLE, UPPER	1
2	LINKAGE WASHERΦ10	16	24	JOINT CONNECTER	1
3	FRAME	2	25	POWER UNIT ASSEMBLY	1
4	LINKAGE WASHERΦ8	6	26	SPRING PIN 4X25	1
5	BOLT M8X25	4	27	PISTON ROD AXIS	1
6	LINK ROD AXIS	2	28	“C”RING No.19	4
7	NYLON LOCK NUT M18	2	29	LIFTING ARMS AXIS	1
8	REAR WHEEL SET	2	30	PULL ROD AXIS	2
9	REAR WHEEL SADDLE	2	31	PULL ROD	2
10	NYLON LOCK NUT M12	2	32	LIFTING ARMS	1
11	FLAT WASHER	2	33	LINK ROD	2
12	HANDLE BASE AXIS	2	34	“C”RING No.16	4
13	HANDLE BASE SCREW	1	35	LINK ROD WASHER	2
14	SPRING	2	36	LINK ROD AXIS	1
15	RUBBER SADDLE PAD	1	37	LIFTING ARMS SIDE AXIS	1
16	SADDLE AXIS	1	38	FRONT WHEEL AXIS	1
17	SADDLE	1	39	FRONT CASHER	1
18	SADDLE WASHER	1	40	HANDLE BAR	2
19	SADDLE BASE	1	41	HOLDER AXIS	1
20	HANDLE BASE	1	42	BOLT M8X20	4
21	HANDLE. LOWER	1	43	SCREW BUSHING	2
22	BOLT M6X10	1			

Distributed by Kincrome Group www.kincromegroup.com

3 Lakeview Drive Scoresby Victoria

Phone: 1300 657 528